TABLE 5-2. STUDIES ON RESPIRATORY SYMPTOMS REFERENCED IN THE U.S. SG AND NRC REPORTS of 1986

Study	Age of subjects	U.S SG	NRC
Bland et al., 1978	Children/adol. (12-13)	X	
Bland et al., 1958	Children (12)		X
Charlton, 1984	Children/adol. (8-19)	X	
Colley, 1974	Children (6-14)	X	X
Dodge, 1982	Children (8-10)	X	X
Ekwo et al., 1983	Children (6-12)	X	
Kasuga et al., 1979	Children (6-11)	X	
Lebowitz and Burrows, 1976	Children (< 16)	X	X
Schenker et al., 1983	Children (5-14)	X	X
Schilling et al., 1977	Children/adol. (< 16)	X	X
Tager et al., 1979	Children (5-19)		X
Ware et al., 1984	Children (6-13)		X
Weiss et al., 1980	Children (5-9)	X	X

2029047669

Source: https://www.industrydocuments.ucsf.edu/docs/lydl0000

5.4.2. The National Research Council Report on Respiratory Symptoms

Almost all of the cross-sectional studies that have compared children of parents who smoke with the children of parents who do not smoke have reported increased prevalence of respiratory symptoms, usually cough, sputum, or wheezing, in the children of smoking parents. Some studies, including some that have not found a statistically significant increase in the prevalence of respiratory symptoms in ETS-exposed children, observed an increase in prevalence of respiratory symptoms as the number of household smokers increases.

Three problems related to interpretation of results are particularly relevant to studies of respiratory symptoms in children--underreported active smoking on the part of the children, recall bias leading to overreporting of symptoms by parents, and the confounding variables of infections in parents. All three may lead to overestimation of symptom prevalence among children of smokers. It has been observed that parents, especially mothers who have a history of severe respiratory illness, report higher rates of respiratory symptoms in their children (Schenker et al., 1983; Ferris et al., 1985).

Lebowitz and Burrows (1976), reporting on children in the Tucson Epidemiologic Study of Obstructive Lung Disease, emphasized the need for controlling for parental symptoms. Ferris et al. (1985) have argued, however, that correcting for parental symptoms represents an overcorrection for respiratory symptoms in children since it also corrects for the parents' smoking habits. In the Harvard Air Pollution Respiratory Health Studies (Six-Cities Study) of children ages 6 to 9 years, the variable indicating whether the parent had a history of bronchitis, emphysema, or asthma was found to be a highly significant risk factor for cough and wheeze and a history of respiratory illness among children.

In both the Lebowitz and Burrows and Ferris et al. studies, adjustment for parental symptoms or respiratory illness decreased the strength of the apparent association between exposure to ETS and respiratory symptoms but did not eliminate it. This finding leads to the

2029004670

Source: https://www.industrydocuments.ucsf.edu/docs/lydl0000

05 NOV 90

reasonable conclusion that the exposures typical of ETS are sufficient to cause respiratory symptoms in some children. The increase in frequency of cough was 20% to 50%, and as high as 90%, when there were smoking parents. The increased frequency of wheezing was more variable, which may indicate the difficulty in assessing this symptom. Furthermore, there appears to be a dose-response relationship between exposure and the likelihood of the child's developing respiratory symptoms or a respiratory illness.

5.4.3. Recent Studies on Respiratory Symptoms

Studies in Table 5-1 that address respiratory symptoms vary by objective and methodological approach. For discussion they are categorized roughly by age of the study subjects. Age is an important factor for several reasons. Susceptibility and the manifestation of symptoms may be related to duration of exposure or to developmental growth and maturation. It is also of interest to identify respiratory symptoms in infancy that may be predictive of chronic respiratory disorders or impaired lung function in later years. As noted previously, evidence of smoking in the home is more clearly differentiated between subjects in the first few years of life where there is little exposure to ETS and confounding substances outside the home. For this age group, maternal smoking has historically been more strongly related to respiratory symptoms and illnesses in early childhood than have paternal smoking or other more general measures of household exposure. This outcome is consistent with what would be anticipated if ETS exposure is causally linked to an increased incidence of symptoms.

A further reason for considering age relates to the potential sources of bias, mentioned above and discussed further in the summary and discussion to follow (Section 5.4.4.). Since smokers tend to have more respiratory symptoms than nonsmokers, it has been claimed that parents may overstate (or understate) their own children's symptoms. It seems unlikely, however, that parental perceptions of their children's health are sufficiently distorted or

2029090671

Source: https://www.industrydocuments.ucsf.edu/docs/lydl0000

influenced by their own health conditions to have a broad-based influence across numerous studies. Perhaps of greater significance is the potential for unknowingly treating active smokers as passive smokers. Children of parents who smoke are more likely to become smokers than children of nonsmokers. Consequently, subjects who smoke but are misreported as nonsmokers may be more likely to be included with those exposed to ETS at home. If a subject's own smoking contributes to respiratory symptoms, then the adverse effects of passive smoking may be overstated. As noted previously, children may become smokers as young as 10 years of age, and experimentation with cigarettes may start younger.

Of the studies examined in this report, one is on infants; four are on children of primary school age (5, 7, 5-11, and 6-10); one is on adolescents (10-16); two cover a wide age range from birth (0-14 and 0-10). Virtually all of the investigators report some adverse outcome associated with ETS exposure (except possibly Park and Kim, 1986, for ages 0 to 14). Statistical significance is not always achieved, however, and it is not always clear if the findings reported include all symptoms investigated. Nevertheless, the evidence is very substantial. If there were no effects of ETS exposure on respiratory symptoms, then the outcomes would be equally likely to produce an observed increase or decrease in relation to ETS exposure. This is clearly not the case for the published studies.

Stern and colleagues (1987) evaluated the effects of infant exposure to maternal smoking in a cohort of over 4000 Canadian schoolchildren. Cough and phlegm were more frequent symptoms in children whose mothers smoked during the child's first two years. (Cough was also more common in children whose mothers smoked during pregnancy, which is a potential confounding variable.)

Increased occurrence of cough and wheeze was commonly reported to be associated with ETS exposure in studies of children in the next higher age group (5, 7, 6-10, 5-11). Specifically, Marks (1988) conducted a multiethnic study of inner-city preschool 5-year-olds. Children living

2029007672

Source: https://www.industrydocuments.ucsf.edu/docs/lydl0000

in smoking households were more likely to experience coughing or wheezing during physical exercise, although cigarette smoke exposure did not appear to influence other respiratory symptoms. The effect of passive smoking on respiratory symptoms of children ages 5 to 11 years was investigated in over 4000 English children and nearly 800 Scottish children participating in the National Study of Health and Growth in 1982 (Somerville et al., 1988). A number of statistically significant positive associations were found between respiratory conditions, including wheeze and cough, in English children and the number of cigarettes smoked per day at home by their parents. Only wheeze was significant for Scottish children. Frequent "cough first thing in the morning" showed a positive but not statistically significant association in English children.

McConnochie and Roghmann (1986) explored the effects of passive smoking and non-breast-feeding on wheezing in children ages 6 to 10. Maternal smoking, lack of breast-feeding, and two measures of genetic tendency (family history of respiratory allergy and male sex) predicted wheezing in children with a mean age of 8.4 years. Passive smoking determined wheezing only among children whose family history was positive for respiratory allergy. The final study in this age category is by Chan and associates (1989) who found evidence that low birth weight children of age seven experience wheezing when exposed to ETS. In a comparison of 121 seven-year-old English children with a history of low birth weight (< 200 g) and an unselected reference group of schoolchildren of the same age, the investigators reviewed hospital charts at discharge after birth; administered questionnaires on family, social, and clinical history; and performed tests for lung function, bronchial reactivity, and allergies. Multiple logistic regression was used to control for socioeconomic status, neonatal oxygen scores, atopy, and family history of asthma. In the reference group, daytime (but not nocturnal) cough was weakly associated with maternal smoking but not with smoking by other household members. Maternal smoking was associated with wheeze but not cough in the low birth weight cohort.

2029004673

Source: https://www.industrydocuments.ucsf.edu/docs/lydl0000

The two studies of children in the age ranges 0-10 and 0-14 are by Neuspiel et al. (1989) and Park and Kim (1986), respectively, both of whom utilized large samples. The former studied the effect of parental smoking on wheezing in 9670 British children. Children of smoking mothers had a significantly increased cumulative incidence of post-infancy wheezing to ten years of age, but it was confined to an increase in wheezy bronchitis. (The authors note that some investigators have suggested that wheezy bronchitis is clinically and pathologically indistinguishable from asthma, so this study is referenced in Section 5.7.3. as well.) There was a 14% increase in childhood wheezy bronchitis when mothers smoked over four cigarettes per day and a 49% increase at 14 cigarettes per day after adjustment for covariables. The covariables controlled in the analysis (multiple logistic regression) include paternal smoking, social status, sex, history of family allergy, crowding, breast-feeding, gas cooking and heating, and bedroom dampness. Some of the observed effect was explainable by maternal respiratory symptoms and maternal depression, but not by neonatal problems, the child's allergic symptoms, or paternal respiratory symptoms. Passive smoking was related only to wheezy bronchitis and not to parent-reported asthma or wheezing for other reasons.

The Park and Kim (1986) survey of 3651 Korean children from 0 to 14 years of age was conducted to ascertain if coughing is related to ETS exposure. A rural area was selected for the survey where adult smokers showed a similar life-style and spent much of their time at home. The prevalence and frequency of coughing was found to increase with the number of adult household smokers and with the number of cigarettes smoked in an analysis unadjusted for covariables. Smoking by children is unlikely to be a confounding factor as smoking is seldom seen in children below 15 years of age in Korea. Data on 21 extraneous variables were collected in the study. When included in an adjusted statistical analysis, the presence of coughers in the family was found to be an explanatory variable of some importance. The association of ETS exposure with increased coughing may be due to the indirect effect of family sn. g through

2029047674

Source: https://www.industrydocuments.ucsf.edu/docs/lydl0000

coughers in the family, or a direct consequence of exposure to ETS. The mechanism by which adult household smoking is related to increased coughing in children was not investigated.

Teculescu et al. (1986, in French) conducted a relatively small study that compared 46 nonsmoking children ages 10 to 16 years whose parents smoke with an identical number of children matched for sex, age, and height whose parents were nonsmokers. Passive exposure to parental tobacco smoke was associated with a higher prevalence of respiratory symptoms.

5.4.4. Summary and Discussion of Respiratory Symptoms

Studies on the relationship of ETS exposure and respiratory symptoms appearing subsequent to the U.S. SG and NRC reports of 1986 provide additional support to those reports' conclusions. Increased cough has been observed in a range of ages, including 0 to 2, 5 to 11 and 0 to 14 (Stern et al., 1987; Somerville et al., 1988; and Park and Kim, 1986, respectively). The last reference, however, found that the substantial dose-response observed could be largely (but not totally) explained by a family history of cough or phlegm. Similarly, McConnochie and Roghmann (1986) found that ETS exposure predicts wheezing only in families with a history of respiratory allergy. The cumulative incidence of post-infancy wheezy bronchitis through 10 years of age increased with the amount mothers smoked, in the large study by Neuspiel et al. (1989). They found that some of the effects could be explained by maternal respiratory symptoms. These results are consistent with the explanatory effect of parental symptoms found in the studies by Lebowitz and Burrows (1976) and Ferris et al. (1985) (Section 5.4.2). A weak association of wheezing was reported in seven-year-olds of low birth weight (Chan et al., 1989). Marks (1988) observed increased wheezing and coughing in exposed children of age five following physical exercise.

Family history of respiratory symptoms and disease appears to be a confounding variable for the interpretation of data. As noted in the remarks from the NRC report (Section 5.4.2),

2029907675

Source: https://www.industrydocuments.ucsf.edu/docs/lydl0000

bias may be introduced by parents who have a history of respiratory illness for several reasons. They may be overstating their children's symptoms, or their children may actually have more respiratory symptoms and illness. The latter possibility could be the result of intra-family correlation of susceptibility (referred to as familial resemblance in Kauffmann et al., 1989) or may be attributable to contagion between members of the same household. The conclusion is simply that family history has been shown to be a confounding variable in some studies showing an association of respiratory symptoms in children with parental smoking. This means that family history, as well as any other factors correlated with parental smoking, is a candidate for causally contributing to the occurrence of respiratory symptoms in children. When data have been collected on family history one has the option of attempting to adjust for its effect statistically. How meaningful the results are, however, depends on how confounded family history is with parental smoking. Correlation between family history (as reported in the data, whether biased or not) and household exposure to ETS will tend to lead to an understatement of the statistical significance of ETS after adjustment for family history and conversely, regardless of which (if either) is causally related to the observed increase in respiratory symptoms. This difficulty has been noted in the literature (Section 5.4.2).

Some additional precautions to those already discussed are in order. Controlling for active smoking becomes an issue for subjects at about age ten (some evidence suggests seven or eight years of age) depending on the culture, even though it may be light smoking. Most researchers have been aware of the potential confounding effect of smoking and have attempted to control for it. Some studies have excluded persons who smoke, and others have made them a separate group for comparison. A greater difficulty probably lies in the potential for misreported smoking habits. Young persons may be reluctant to admit to smoking cigarettes, especially if they have been experiencing respiratory maladies. Data are often obtained from parents, who may not be aware of a child's smoking. Future studies may include cotinine tests

2029047676

Source: https://www.industrydocuments.ucsf.edu/docs/lydl0000

to confirm the reported smoking status (as in Strachan et al., 1989). Of course, misreported smoking status would not explain the observed relationship between ETS exposure and respiratory symptoms in infants and children up to the middle years of primary school

In conclusion, there is no apparent single source of systematic bias that might explain the substantial evidence accumulating across the multiple age groups, investigative approaches, and environmental and cultural conditions studied. Family history may cause overstatement of conclusions when it is not taken into account in the analysis of data, but it may only indicate that ETS is related to increased respiratory symptoms indirectly, or both directly and indirectly. It is reasonable to conclude that parental smoking increases the incidence of respiratory symptoms from infancy well into primary school years and probably through the adolescent years. Misreported smoking status may have some influence in studies of older children. Results in the higher age group, however, are not inconsistent with findings at other ages. In addition to the unlikelihood that bias significantly distorts the overall results, several other factors are supportive: (1) evidence that maternal smoking tends to be more of a factor than paternal smoking in the first one to two years of life; (2) an observed dose-response function in numerous cases; and (3) the biological plausibility given the increased incidence of respiratory symptoms in adult smokers.

5.5. ACUTE RESPIRATORY ILLNESS

References to the evidence on acute respiratory illness in the reports of the U.S. SG and the NRC of 1986 may be found in Table 5-3. As in Section 5, conclusions of the U.S. SG and NRC reports are summarized, subsequent evidence is addressed, and the overall implications for exposure to ETS are assessed in a summary and discussion section.

2029047677

Source: https://www.industrydocuments.ucsf.edu/docs/lydl0000

TABLE 5-3. STUDIES ON RESPIRATORY ILLNESS REFERENCED IN THE U.S. SG AND NRC REPORTS OF 1986

Study	Age of subjects	U.S. SG	NRC
Cameron et al., 1969	Children (6-9)	X	
Colley, 1971	Infants	X	
Colley, 1974	Infants		X
Dutau et al., 1981	Infants/children (0-6)		X
Fergusson et al., 1981	Infants	X	X
Harlap and Davies, 1974	Infants	X	X
Leeder et al., 1976b (also see Colley, 1974, and Leeder et al., 1976a)	Infants	X	X
Pedreira, 1985	Infants	X	X
Pullen and Hey, 1982	Children	X	
Rantakallio, 1978	Infants/children (0-5)	X	X
Said et al., 1978	Children/adol. (10-20)	X	X
Sims et al., 1978	Children	X	
Speizer et al., 1980	Children (6-10)	X	X
Ware et al., 1984	Children (5-9)	X	

2029047678

Source: https://www.industrydocuments.ucsf.edu/docs/lydl0000

who smoke than in children of nonsmokers. All the studies that have examined the incidence of respiratory illnesses in children under the age of one year have shown a positive association between such illnesses and exposure to ETS. There is a dose-response relationship that relates more to maternal smoking than to paternal smoking as the source of ETS exposure.

The association between ETS exposure and increased occurrence of respiratory illnesses in children is very unlikely to have arisen by chance. It may represent a direct association between ETS exposure and disease (a causal explanation) and/or an indirect one (noncausal) arising because children living in homes of smokers are at risk of such diseases for other reasons. Some of the studies have examined the possibility that the association is indirect by allowing for confounding factors--such as social class, parental respiratory illnesses, and birth weight--and have concluded that such factors do not explain the results. This argues, therefore, in favor of the causal explanation. Such an explanation is also supported by the evidence of a dose-response relationship specific for respiratory disease. Regardless of the mechanism, however, the exposure of small children to smoking in the home appears to put them at risk of respiratory illness.

5.5.3: Recent Studies on Acute Respiratory Illness

Four of the studies that have appeared subsequent to the U.S. SG and NRC reports deal with the potential relationship between exposure to ETS and lower-respiratory-tract illness (excluding the study on asthmatics for now and counting Chen, 1989 and Chen et al., 1988 as one study). All four reports indicate an association between ETS and increased respiratory illness, although the approaches and health-related endpoints are varied. Three studies pertain to infants. The remaining one applies to the age range 5-11.

Chen and his colleagues (1988) investigated the relationship between passive smoke exposure and hospitalization for bronchitis and pneumonia by 18 months of age in a study of

2025047679A

Source: https://www.industrydocuments.ucsf.edu/docs/lydl0000

5.5.1. The U.S. Surgeon General's Report on Acute Respiratory Illness

The results of these studies show excess acute respiratory illness in the children of parents who smoke, particularly in children under two years of age. This pattern is evident in studies conducted with different methodologies and in different locales. The increased risk of hospitalization for severe bronchitis or pneumonia associated with parental smoking ranges from 20% to 40% during the first year of life. Young children appear to represent a more susceptible population for the adverse effects of involuntary smoking than older children or adults. The time-activity patterns of infants, which generally place them in proximity to their mothers, may lead to particularly high exposure to ETS if the mother smokes.

The possibility of bias due to the respiratory status of the reporting parent(s) must be considered for the studies that have used questionnaires to measure illness experience. In all studies in which potential reporting bias was examined, control for parents' status reduced, but did not eliminate, associations of involuntary smoking with health outcomes (Colley et al., 1974; Leeder et al., 1976a,b; Schenker et al., 1983; Ware et al., 1984). Further, the consistency of these studies, in spite of differing study populations and methods, weighs against bias as the sole explanation. Acute respiratory illnesses during childhood may have long-term effects on lung growth and development. It may possibly increase the susceptibility of the lung to the effects of active smoking and to the development of chronic obstructive lung disease (Samet et al., 1983; U.S. DHHS, 1984).

5.5.2. The National Research Council Report on Acute Respiratory Illness

There is now strong evidence that bronchitis, pneumonia, and other lower-respiratory-tract illnesses occur more frequently (at least during the first year of life) in children who have one or more parents who smoke. Bronchitis, pneumonia, and other lower-respiratory-tract illnesses occur up to twice as often during the first year of life in children who have one or more parents

2029004679

Source: https://www.industrydocuments.ucsf.edu/docs/lydl0000

2227 Chinese children. The results indicated a significant dose-response relationship of household smoking to hospitalization for respiratory illness during the child's first 18 months. No confounding variables were discovered. Further analyses indicated that infants who were less than six months of age, had low birth weight, or were artificially fed were relatively more susceptible to the effects of tobacco smoke. Moreover, the cumulative incidence of bronchitis and pneumonia increased significantly with increased smoking of family members. This result persisted when sex, birth weight, nursery care, father's education, coal for cooking, and cases of adult chronic respiratory disease were taken into account. An interesting and important aspect of this study is that of 1746 smoking families, there were no mothers who smoked. Presuming that the reporting of smoking habits is accurate, or nearly so, smoking during pregnancy is unlikely to confound postnatal exposure to ETS. In a later publication based on the sample described above, Chen (1989) reported that among artificially fed infants the frequency of hospitalization for respiratory illness was 2.5 times greater when more than 20 cig./day were consumed in the home. The frequency dropped to 1.7 times greater if 1 to 19 cig./day were consumed. Chen also concluded that passive smoking and artificial feeding work synergistically, producing a detrimental effect much greater than that produced by their separate actions. Thus, infants may be at greater risk from ETS exposure if bottle fed.

Further evidence of a relationship between passive smoking and respiratory illness in the child's first year is provided by Ogston et al. (1987). These investigators conducted a prospective study of 1565 infants involved in the Tayside Morbidity and Mortality Study. Health visitors interviewed parents to gather data on social class, age of parents, method of heating and cooking, father's and mother's smoking habits, and the presence of upper- or lower-respiratory-tract infections (later confirmed by medical diagnosis). Parents were classified simply as smokers or nonsmokers. Multiple logistic regression indicated that respiratory illness during the first year of life was predicted by parental smoking. Moreover, a trend indicated increasing

2029047680

Source: https://www.industrydocuments.ucsf.edu/docs/lydl0000

incidence from (a) nonsmoking families to (b) only father smoking, to (c) mother or both parents smoking.

A cohort study of 4099 Canadian children, 7 to 12 years of age, corroborates the findings described above. Stern and associates (1987) found that children whose mothers smoked during the first two years of their life were significantly more likely to have been hospitalized at least once before the age of two years for a respiratory illness than children of nonsmoking mothers. Moreover, ETS-exposed children hospitalized in their first two years of life were six times more likely to be hospitalized for chest illness than unexposed children. Similar results were reported for children whose mothers smoked during pregnancy, however, so in utero and postnatal exposure to products of tobacco smoke may be partially confounded.

A study demonstrating a dose-response relationship between passive smoking and respiratory illness in children 5 to 11 years old was conducted by Somerville and associates (1988). The sample consisted of 4000 English and 800 Scottish children from the National Study of Health and Growth. Data on each child's respiratory symptoms, parental smoking, and family background were obtained from a self-administered questionnaire completed by the mother. Passive smoking was assessed by the total number of cigarettes smoked each day by the mother and the father. Multiple regression analysis indicated that the number of cigarettes smoked by English parents was significantly associated with bronchitis attacks within the last two months. Neither household crowding, parents' education, father's occupation, nor age or sex of the child confounded this result.

5.5.4. Summary and Discussion on Respiratory Illness

As in the discussion of respiratory symptoms (Section 5.4), the respiratory status of parents is a factor to be considered in interpreting the results on respiratory illness. As the U.S. SG report notes, there is the possibility of biased reporting from parents who smoke and may be

2029047681

Source: https://www.industrydocuments.ucsf.edu/docs/lydl0000

more subject to respiratory ailments than normal. All of the studies reviewed used questionnaires or interviews. The questions dealing with respiratory illness tend to be rather specific, requiring little subjective judgment. For example, the number of hospitalizations for respiratory or chest illness during the first year or two of life, and the number of doctor-diagnosed cases, were indexes of health (Chen et al., 1988; Chen, 1989; and Stern, 1987). Ogston et al. (1987) confirmed reports of respiratory infections by medical diagnosis. Consequently, the potential for biased reporting from parents who smoke may be less of an issue for evaluation of respiratory illness than for respiratory symptoms.

The consistent association between respiratory illness and ETS exposure in the home over all studies to date, especially in studies of infants, is unlikely to be attributable to a confounding factor. Such a factor would have to be consistently operative over the broad spectrum of countries, cultures, and age groups studied and of substantial influence on respiratory health. Most researchers have attempted to control for potential confounding factors, although only one study has controlled for in utero exposure (Chen et al., 1988). The dose-response relationships, reported in recent studies (Chen et al., 1988; Somerville et al., 1988; Ogston et al., 1987) and in previous evidence assessed by the NRC and U.S. SG committees, are consistent with a causal association; a plausible explanation in terms of systematic bias or a confounding factor is less apparent. These arguments and the biological plausibility that ETS exposure increases the incidence of lower-respiratory-tract illnesses in the first one-to-two years of life provides some support for a causal relationship. The influence of potential sources of bias and confounding factors, however, cannot be adequately assessed to conclude a causal association between ETS exposure and the increased incidence of respiratory illnesses in young children. The consistency of the conclusions across the cumulative recent and previous studies, however, cannot be statistically attributed to chance occurrence; it is only the explanation behind the association that is uncertain.

2029047682

Source: https://www.industrydocuments.ucsf.edu/docs/lydl0000

05 NOV 90

The implications of early childhood respiratory illnesses for health in later years is an important related issue that is difficult to study. Stern et al. (1987) concluded that the strong relationship between hospitalization before the age of two years for a chest illness and subsequent respiratory symptoms and decreased pulmonary function later in childhood suggests that there are definite carryover effects of early acute respiratory illness. In a study not directly related to passive smoking, Barker and Osmond (1986) found a strong geographical relation between death rates from chronic bronchitis and emphysema in 1959 to 1978 and infant mortality from bronchitis and pneumonia during 1921 to 1925 for regions in England and Wales. The authors concluded that this relation provides strong evidence of a direct causal link between lower respiratory infection in early childhood and chronic bronchitis in adult life. Although these studies contribute some evidence of the potential for long-term effects from childhood exposure, further support is needed for a conclusion. Long-term implications have been expressed as a major concern by numerous authors. Chronic respiratory ailment or permanently impaired lung function has largely been speculated from the results of multiple studies over various age groups. No major longitudinal study following subjects from infancy through adolescence has been conducted.

5.6. PULMONARY FUNCTION

Studies on pulmonary function referenced in the 1986 reports of the U.S. SG and the NRC are displayed in Table 5-4. Conclusions of the U.S. SG and NRC reports are summarized, and studies appearing since the U.S. SG and NRC reports are reviewed. The current state of evidence on the potential association of ETS exposure with pulmonary function are summarized and discussed.

2029047683

Source: https://www.industrydocuments.ucsf.edu/docs/lydl0000

06 NOV 90

TABLE 5-4. STUDIES ON PULMONARY FUNCTION REFERENCED IN THE U.S. SG AND NRC REPORTS OF 1986

Study	Age of subjects	U.S. SG	NRC
Berkey et al., 1986	Children (6-10)	X	X
Brunekreef et al., 1985	Adults	X	
Burchfiel et al., 1986	Infants/children (0-10)	X	
Chen and Li, 1986	Children/adol. (8-16)	X	X
Comstock et al., 1981	Adults	X	
Dodge, 1982	Children (8-10)	X	X
Ekwo et al., 1982	Children (6-12)	X	
Ferris et al., 1985	Children/adol.		X
Hasselblad et al., 1981	Children (5-13)	X	X
Kauffmann et al., 1983	Adults	X	
Kentner et al., 1984	Adults	X	
Lebowitz, 1984	Families	X	
Lebowitz and Burrows, 1976	Children/adol. (< 16)	X	X
Pimm et al., 1978	Adults	X	
Schilling et al., 1977	Children/adol. (< 16)	X	X
Shepard et al., 1979	Adults	X	

(continued on following page)

2029047684

Source: https://www.industrydocuments.ucsf.edu/docs/lydl0000

05 NOV 90

TABLE 5-4. (continued)

Study	Age of subjects	U.S. SG	NRC
Sims et al., 1978	Children	X	
Tager et al., 1979	Children (5-19)		X
Tager, 1983	Children (5-9)	X	X
Tashkin	Children	X	
Vedal et al., 1984	Children (6-13)	X	
Ware et al., 1984	Children (6-13)		X
Weiss et al., 1980	Children (5-9)	X	X
White and Froeb, 1980	Adults	X	

5.6.1. The U.S. Surgeon General's Report on Pulmonary Function

Cross-sectional studies have demonstrated lower values on tests of pulmonary function (FEV 75%, FEV_1, FEF_{25-75}, and flows at low lung volumes) in children of mothers who smoked compared with children of nonsmoking mothers. Longitudinal studies confirm the cross-sectional results and provide some insight into the implications of the cross-sectional data. Dose-response relationships have been found in both cross-sectional and longitudinal studies (Tager et al., 1979; Weiss et al., 1980; Ware et al., 1984; Berkey et al., 1986); the level of function decreases with an increasing number of smokers in the home. As would be anticipated from the mother's greater contact time with the child, maternal smoking tends to have a greater impact than paternal smoking. Younger children seem to experience greater effects than older children (Tager et al., 1979; Weiss et al., 1980), and in older children the effects of personal

2029047685

Source: https://www.industrydocuments.ucsf.edu/docs/lydl0000

smoking may be additive with those of involuntary smoking (Tager et al., 1979, 1985). Some studies have reported greater effects on flows at lower lung volumes in girls than in boys (Burchfiel et al., 1986; Tashkin et al., 1984; Yarnell and St. Leger, 1979; Vedal et al., 1984). Flows at higher lung volumes seem to be more affected in boys (Burchfiel et al., 1986; Yarnell and St. Leger 1979; Berkey et al., 1986; Tashkin et al., 1984). It is unclear whether these sex effects represent differences in exposure, differences in susceptibility to environmental cigarette smoke, or differences in growth and development. The observed reduction in lung function of children associated with maternal smoking is small, on the average. Some children may be affected to a greater extent, however, and even small differences may be important for children who become active smokers in adulthood.

5.6.2. The National Research Council's Report on Pulmonary Function

It is often difficult (but not impossible) to measure lung function in young children, and it is also hard to dissect out the relative contribution of ETS and that of natural variation and the effect of respiratory infections to pulmonary damage. The most important contributors to variation in lung function among children are size-related factors such as sex, age, and height. These account for about 50% to 60% of the variation (Comroe et al., 1962). Nevertheless, a majority of the studies has shown a small decrease (up to 0.5% of FEV_1 per year) in rate of increase in lung function associated with normal growth in children living with one or more parents who smoke compared with those living with nonsmoking parents. These differences have usually been statistically significant. Although the mean effect is small, there are individuals in each study who have large decrements in growth of lung function. Some studies have found a dose-response relationship with the number of smokers in the home or the amount smoked (Hasselblad et al., 1981). In most studies, only the maternal effect was statistically significant. It is not possible to determine whether ETS is directly causing the decreased lung

2029047686

Source: https://www.industrydocuments.ucsf.edu/docs/lyd

05 NOV 90

function observed in children of smoking parents or if an increased infection rate in these children is responsible for the decrease.

The annual small decrease in FEV_1, which is related to exposure to ETS, is unlikely to be clinically significant. However, the effect may be important in two respects. First, the existence of statistically significant differences related to parental smoking leads to the conclusion that there are pathophysiologic effects of exposure to ETS in the lungs of the growing child. It may be an in utero effect, an effect on the growing and remodeling of the lung, or both. Second, it raises the question of whether the child who is adversely affected by parental smoking may be at increased risk for the development of chronic airflow obstruction in adult life. An accelerated decline in lung function could increase the risk of chronic pulmonary disease (Samet et al., 1983). An important unanswered question is whether exposure to ETS affects the way the lungs grow and develop during childhood.

5.6.3. Recent Studies on Pulmonary Function

Kauffmann et al. (1989) asked what factors related to lung function may be correlated between parents and their offspring between 6 and 10 years of age. A total of 1160 children were included in the study whose parents had been examined in the 1975 French PAARC Cooperative Study. Positive correlations between parent and child of FVC, FEV_1, and FEF_{25-75} were observed and exhibited an increasing temporal trend with increasing age of the children. Comparisons between siblings of the opposite sex suggest that different growth patterns between boys and girls may be a factor in lung function. Maternal, but not paternal, smoking was associated with a significant decrease in FEV_1 and FEF_{25-75}, but not with FVC.

Masi et al. (1988) suggest that passive smoking during the growth period of the lungs in early life permanently affects their mechanical properties in young men. They collected mail-in questionnaire data on lifetime exposure to ETS. The exposure estimates were compared with

2029047687

Source: https://www.industrydocuments.ucsf.edu/docs/lydl0000

pulmonary data previously collected as part of a cross-sectional study of the evaluation of lung function from adolescence to early adulthood. FEF_{25-75} was inversely related to ETS exposure estimates before age 17 in males, but not in females.

A longitudinal study of pulmonary function between the ages of 5 and 25 supports the hypothesis that childhood respiratory illnesses have implications for pulmonary development (Lebowitz and Holberg, 1987; also, Lebowitz et al., 1987). A total of 1502 observations were made between 1972 and 1983 on 362 subjects 6 to 15 years of age when initially tested. Follow-up averaged about 9 years. Measures of pulmonary function included FVC, FEV_1, flow at 50% of FVC($\dot{V}_{max}$ 50%), and flow at 75% of expired FVC($\dot{V}_{max}$ 75%). The study includes active smokers as well as nonsmokers, which complicates analysis and interpretation of the data. The statistical models assumed describe the data well, but the technical details are sketchy. The authors conclude that respiratory illnesses and smoking had the biggest negative impact on growth of lung function, using FVC, FEV_1, $\dot{V}_{max}$ 50%, and size-compensated flows ($\dot{V}_{max}$ 50%/FVC). Further negative impacts were due to parental smoking, especially as it interacts with active smoking and respiratory disease. Measures of flow ($\dot{V}_{max}$ 50%, $\dot{V}_{max}$ 50%/FVC) were more sensitive than FEV_1 to the effects of concurrent disease and smoking and were better indicators of a long-term effect persisting into early adulthood.

Stern and colleagues (Section 5.4.3.) found a statistically significant 0.7% decrement in FEV_1 associated with maternal smoking during the first two years of life, but no effect on FVC was observed. The small study by Teculescu and others (Section 5.4.3.) also reported a significant decrease in forced expiratory flows, with effects more marked in boys. The single-breath nitrogen washout test, a sensitive test of small airways obstruction in adults, did not detect any effect of passive smoking in this limited sample (46 nonsmokers of ages 10 to 16 whose parents were smokers).

2029047688

Source: https://www.industrydocuments.ucsf.edu/docs/lydl0000

5.6.4. Summary and Discussion of Pulmonary Function

The NRC report has previously noted the difficulties in measuring lung function in small children and then sorting out the effect attributable to ETS exposure. Height, age, and sex are factors to control in tests of pulmonary function. Factors related to familial resemblance (Kauffmann et al., 1989), such as parental smoking and lung function, temporal trends in parent-child correlations as a child's age increases, and different growth patterns between boys and girls are further complicating factors. The evidence suggests that any effect of passive smoking on lung function is likely small. In view of these conditions, it is not surprising that study results have been somewhat mixed and difficult to assess overall.

If a health effect is associated with ETS, it is generally more apt to be observed if the differential exposure to ETS between study subjects being compared is large than if it is small. This is particularly true when factors affecting the variability of study data are poorly controlled and difficult to assess. This observation may be particularly relevant for studies of pulmonary function, as illustrated by comparative analyses of two major longitudinal studies. Lebowitz and Holberg (1988) and Tager et al. (1987) both reanalyzed the longitudinal data from the East Boston Study and the Tucson Study. The former study found an effect of maternal smoking on FEV_1 and the latter did not. Both reviews concluded that the disparate results were not attributable to the different methods of analysis originally used. The difference in ETS exposure between the "exposed" and "unexposed" groups appears likely to be much larger in one study than in the other, attributed (at least in part) to the differences in climate (which affects the amount of ventilation from outdoor air).

Differences between studies that affect exposure levels and the influence of host-related variables affecting measured responses that cannot be fully controlled make it difficult to assess the overall evidence from studies on pulmonary function. In reviewing previous studies, Tager (1986) notes that some consistency emerges if one focuses on FEV_1 and FEF_{25-75}. The recent

2029047689

Source: https://www.industrydocuments.ucsf.edu/docs/lydl0000

05 NOV 90

study of Kauffmann et al. (1989) found that maternal smoking was related to FEV_1 and FEF_{25-75} but not to FVC, consistent with Tager's observation. Two other conclusions that appear frequently in the cumulative studies on lung function are the greater susceptibility of boys and the significance of age in subjects up to adulthood.

Recent studies provide additional information on the question of whether childhood exposure to ETS has implications for long-term effects in lung function. As noted by the NRC, it is not possible to determine whether ETS is directly causing the decreased lung function observed in children of smoking parents or if an increased infection rate in these children is responsible for the decrease. Epidemiologic data of Paoletti et al. (1989) support the hypothesis that childhood history of respiratory infection (prior to age 12) and adolescent-adult history are related to increased prevalence of a number of detrimental health conditions in adulthood, including reduced lung function and chronic obstructive lung disease (independent of whether parental smoking is implicated in the childhood history of respiratory illness). Stern et al. (1987) conclude that the strong relationship between hospitalization before the age of two years for a chest illness and subsequent respiratory symptoms and decreased pulmonary function later in childhood suggests that there are definite carryover effects of early acute respiratory illness. The longitudinal study of Lebowitz and Holberg (1987) links early respiratory disorders with long-term pulmonary effects, specifically in the small airways. The study of Masi et al. (1988) suggests a permanent affect in young men (but not women). If passive smoking in childhood is causally associated with respiratory illness (only "association", not "causal association", is concluded in this report), then these studies support the hypothesis of a long-term effect on lung function.

Based on the cumulative evidence available, this report concludes that passive smoking in early childhood is associated with decreased lung function in childhood and with a small reduction in their rate of pulmonary growth and development.

2029007690

Source: https://www.industrydocuments.ucsf.edu/docs/lydl0000

5.7. RELATED RESULTS

A number of studies have investigated the potential for health hazards to children from parental smoking that have not been described under the sections on respiratory symptoms, respiratory illness, or pulmonary function. In most cases there is less evidence on these health related endpoints, but that does not imply that they are necessarily less important--just less thoroughly studied at this time. Some of these studies and their topics of inquiry are summarized in this section. This report concludes that household smoking is associated with excess incidence of middle ear effusion (Section 5.7.1.), but no further conclusions are drawn from the study results described. There is increasing evidence that maternal smoking may be associated with increased prevalence of asthma, particularly before the age of one year. Potential bias in parent-reported data and confounding by in utero exposure, however, are difficult to assess. Based on the overall statistical evidence, it appears unlikely that maternal smoking has a very large effect on asthmatic conditions in children. No conclusions are warranted, however, as study results have been inconsistent and ambiguities complicate comparisons.

5.7.1. Middle Ear Effusion

The U.S. SG report includes reviews of five studies that demonstrate an excess of chronic middle ear disease (including middle ear effusion, a sign of chronic middle ear disease) in children exposed to parental cigarette smoke. A causal mechanism is unknown, however, and potential confounding factors may be important. The long-term implications of excess middle ear disorders need further study. The U.S. SG and NRC reports are similar on this topic; neither draws a firm conclusion.

Additional study data subsequent to these two reports adds to the weight of evidence. In particular, a dose-response relationship is reported by Reed and Lutz; Strachan and coworkers

202904769

Source: https://www.industrydocuments.ucsf.edu/docs/lydl0000

have shown a relationship with salivary cotinine concentrations. Based on the cumulative evidence, this report concludes that parental smoking is associated with increased incidence of middle ear effusion. Recent studies are described below.

Reed and Lutz (1988) evaluated the association between middle ear effusion and household smoke exposure in children seen in an outpatient office. They reported an increasing percentage of middle ear effusion in children with progressive levels of smoke exposure. Strachan and colleagues (1989) assayed saliva of 7-year-olds for cotinine concentrations (apparently the first study to use biochemical data to evaluate exposure to ETS in primary schoolchildren). They concluded that about one-third of the cases of middle ear effusion were statistically attributable to exposure to tobacco smoke. By contrast, Kallail et al. (1987) found that exposure to cigarette smoke apparently was not a risk factor for middle ear problems in a survey of primary schoolchildren. The discrepancy in conclusions is possibly attributable to study differences. Kallail and colleagues grouped children according to outcomes on a school's hearing test. All members of the experimental group were diagnosed by a physician as manifesting a middle ear problem. By contrast, Reed and Lutz (1988) and Strachan et al. (1989) both addressed a specific middle ear problem (effusion) as indicated by abnormal tympanograms.

The association of passive smoking with middle ear effusion is further supported by Hinton (1989), who conducted a study to ascertain whether there is any relationship between parental smoking and various factors in children undergoing surgery for otitis media with effusion. That study included 115 children of ages 1 to 12 years who were admitted for grommet insertion. The admission rate for grommet insertion was statistically higher for children with at least one parent who smokes.

202907692

Source: https://www.industrydocuments.ucsf.edu/docs/lydl0000

5.7.2. Acute upper-respiratory-tract illness

Risk factors for acute upper-respiratory-tract disease in childhood were evaluated in a population-based sample of the Atlanta metropolitan area by Fleming and colleagues (1987). Mothers of children less than 5 years of age were questioned about upper-respiratory-tract infection and ear infection occurring in their children during the preceding two weeks. Maternal smoking was a risk factor for a child's having upper-respiratory-tract infection (odds ratio = 1.7, $p = 0.01$). The small study by Teculescu and colleagues (Section 5.4.3.) found that children of parents who smoke had more frequent upper airway infections.

A study by Willatt (1986) found that sore throats were predicted by maternal passive smoking in children of ages 2 to 15 years. A regression model indicated a dose-response relationship between sore throats and the number of cigarettes the mother smoked. The author noted that active smoking in the older children could not account for these results since the relationship between sore throats and smoke exposure was strongest for children under the median age of 6.9 years. As the author also observes, few studies have looked at the effects of passive smoking on children's upper respiratory tract.

5.7.3. Asthma

The two central issues related to ETS and asthma in children are whether parental smoking increases the prevalence of asthma cases and whether passive smoking exacerbates conditions in asthmatic children. The populations differ with regard to these two questions so the first issue is discussed in this section and the other one is addressed in the next section.

The U.S. SG report found no consistent relationship between the report of a doctor's diagnosis of asthma and exposure to ETS. It noted that the variability in results may reflect differing ages of the children studied, differing exposures, or uncontrolled bias. Recent studies

2029047693

Source: https://www.industrydocuments.ucsf.edu/docs/lydl0000

05 NOV 90

offer some additional evidence suggesting increased prevalence of asthma in children with smoking parents, but the cumulative evidence remains inconclusive.

Stern and coworkers (1987) found that asthma is more prevalent before the age of two in smoking households. Somerville and colleagues (1988) reported increased asthma attacks and morning cough in children 5 to 11 years old, but the results were not statistically significant. Chen et al. (1988) found that asthma was reported more frequently for children in smoking families, but the increase was not statistically significant.

A very recent article by Weitzman et al. (1990) reports significant increase in childhood asthma with maternal smoking. Data from the Child Health Supplement to the 1981 National Health Interview Survey were analyzed with information about 4331 children aged 0 to 5 years to study the relationship between maternal smoking. It was found that maternal cigarette smoking is associated with higher rates of asthma, an increased likelihood of using asthma medications, and an earlier onset of the disease, independent of a number of potentially confounding variables. Children whose mothers smoke one-half pack or more per day are twice as likely to have asthma and are four times as likely to use asthma medications as children of mothers who do not smoke. The authors caution that all information in the study is based on parents' reports (which may be a source of bias as discussed previously).

A study relating bronchial responsiveness in parental smoking was conducted by Martinez and colleagues (1988). Questionnaires were administered to parents of 172 Italian children 9 years old regarding parental smoking habits, the child's and family's history of respiratory illness and symptoms, the number of persons living in the house, the number of rooms in the house, and the type of heat. Skin prick tests and a flow-volume spirometric test were also administered. Male children with smoking parents had a statistically significant increase in bronchial responsiveness (BR) when compared to those whose parents did not smoke (odds ratio, OR = 4.3). No significant increase in BR was found in female children of smoking

2029047699

Source: https://www.industrydocuments.ucsf.edu/docs/lydl0000

parents (OR = 0.5). The relationship between BR in children and smoking in parents was stronger in asthmatics ($p = 0.02$) and remained significant after controlling for asthma and atopy. BR was significantly correlated with atopy. This was also true for nonasthmatic children and for both males and females separately. Male children of smoking parents had increased reactivity to allergens as assessed by the skin prick test index ($p = 0.001$). It was hypothesized that passive smoking, by increasing the frequency of BR and of atopy, may increase the risk of asthma in childhood, particularly in boys.

The following study by Geller-Bernstein et al. (1987) is included in this section on asthma because, as the authors discuss, atopic children with post-infancy wheezing often suffer from asthma throughout childhood. The authors recorded the clinical course and sequential IgE values in a 4-year prospective study of 80 atopic wheezing children between the ages of 6 months and 5 years. Although there was no correlation between increase of IgE levels and type of feeding or exposure to cigarette smoke, statistical data confirmed that bottle feeding and parental smoking lead to persistent wheezing in atopic children.

Neuspiel et al. (Section 5.4.3.) found no evidence of increased prevalence of asthma in children of mothers who smoke, but did find a significant increase in wheezy bronchitis in those children up to 10 years of age.

5.7.4. Symptoms in Asthmatics

The U.S. SG and NRC found some evidence that ETS exposure may increase the frequency or severity of attacks of bronchoconstriction in asthmatic children, but results have been inconsistent and difficult to compare. The stability and the mechanisms of bronchoconstriction differ among asthmatics and study populations have not always been fully characterized. The NRC notes several unresolved issues. For instance, what proportion of a clearly defined population of asthmatics do react to ETS? If the patients are selected according

2029004695

Source: https://www.industrydocuments.ucsf.edu/docs/lydl0000

to methylcholine or histamine responsiveness, criteria should be given for the extent of responsiveness since it is a continuum. These issues remain unresolved, although recent studies contribute additional results to the accumulating evidence on this general topic.

Murray and Morrison (1989) reported in a previous article (1986) that asthmatic children with mothers who smoke have substantially reduced lung function compared to those whose mothers do not smoke. Their current study of 415 nonsmoking asthmatic children found that asthma symptoms (based on an asthma score) were more severe if the mother smoked, with boys apparently more affected than girls. Compared to boys with nonsmoking mothers, there was also a significant decrease in FEV_1, FEF_{25-75}, and PC_{20} in boys with mothers who smoke. Maternal smoking was not significant for lung function tests in girls. When analyzed by age categories, 1 to 6, 7 to 11, and 12 to 17, an age effect became apparent. In the youngest category, there was no significant effect of maternal smoking nor any indications of asthma severity. In the intermediate age category, there was a significant difference in asthma severity (as measured by an asthma score) but not in FVC, FEV_1, FEF_{25-75}, or PC_{20}. In the oldest category, however, maternal smoking was significant for all but FVC. These results are in contrast to those for asthmatics with nonsmoking mothers where lung function improved significantly with age.

Evans and colleagues (1987) evaluated 276 asthmatic children for association of ETS exposure with frequency of emergency room visits, hospitalizations, and impaired pulmonary function. Although a strong association was found for emergency room visits, no association of passive smoking was detected for hospitalizations or abnormalities of pulmonary function (FEV_1, FEF_{25-75}, and PEFR). The analysis of data from the National Health Interview Survey by Weitzman et al. (Section 5.7.3.) found no relationship between maternal smoking and hospitalizations of asthmatic children up to five years of age.

2029007696

Source: https://www.industrydocuments.ucsf.edu/docs/lydl0000

06 NOV 90

5.7.5. Non-Specific Ailments

Ostro (1988) reviewed five years of data from the annual Health Interview Survey (conducted by the National Center for Health Statistics) and found that the number of bed disability days for children of age 0 to 6 years is 20% higher in households with a pack-a-day smoker. A similar result was obtained for adult nonsmokers with a spouse who smokes. (The author notes that the use of disability days in bed as an indicator of acute morbidity is not a strict measure of respiratory impairment.)

Charlton and Blair (1989) found that children's absence from school for minor ailments (e.g., colds, flu, tonsillitis) could be predicted on the basis of their own and their parents' smoking habits four months earlier. The sample consisted of 2885 English children, 12 to 13 years old. Passive smoke exposure was defined as neither parent smoked, only the father smoked, only the mother smoked, or both parents smoked. Logistic regression indicated that whatever the children's smoking habits, the proportion who were absent was higher when both parents or at least the mother smoked. For children who never smoked the proportions absent were 17% if neither parent or only the father smoked vs. 21% if both parents or only the mother smoked. When children smoked "regularly," the proportion absent was 37% if neither parent smoked vs. 46% if both or only the mother smoked. Sex and social background had little effect. Although the authors relate absenteeism to ETS exposure, the evidence for a causal relationship is not apparent.

2029047697

Source: https://www.industrydocuments.ucsf.edu/docs/lydl0000

DRAFT--DO NOT QUOTE OR CITE

APPENDIX A

SUMMARY DESCRIPTIONS OF ELEVEN CASE-CONTROL STUDIES

BROW. The case-control study of risk factors for adenocarcinoma by Brownson et al. (1987) includes 23 never-smoker cases (19 females) among the 102 cases interviewed. All subjects were white, had microscopically confirmed cancers incident from 1979 to 1982, and were identified through the Colorado Central Cancer Registry which covers the five county Denver metropolitan area. In the study as a whole, interviewed cases represented 68.5% of the 149 cases meeting eligibility criteria. Controls were chosen from persons with cancer at sites unassociated with cigarette smoking and were matched to the cases on age and sex. Of the 169 eligible controls, 131 (77.5%) were interviewed. Sixty-nine percent of the cases and 39% of the controls required surrogate respondents.

Passive smoke exposure was analyzed both as a dichotomous variable based on the smoking status of the spouse and as a stratified variable based on the hours per day that the subject was in the presence of persons smoking. Other variables pertain to previous smoking, education, income, occupation, and residence history as an indirect measure of exposure to total suspended particulates.

The relative risk for adenocarcinoma among female never-smokers exposed four or more hours per day relative to a lower exposure was 1.68 (95% C.I. = 0.39 - 2.97) after adjustment for age, income, and occupation. Similar nonsignificant risk estimates were shown when smoking by the spouse was considered as a dichotomous variable. The high proportion of surrogate source data led the authors to conduct parallel analyses limited to self-reported data. Results from those analyses were described as highly comparable and indicated possibly higher risks than those reported for all respondents.

2029047698

Source: https://www.industrydocuments.ucsf.edu/docs/lydl0000

C R C FILE F747 F0052
ETS, EPA (2)

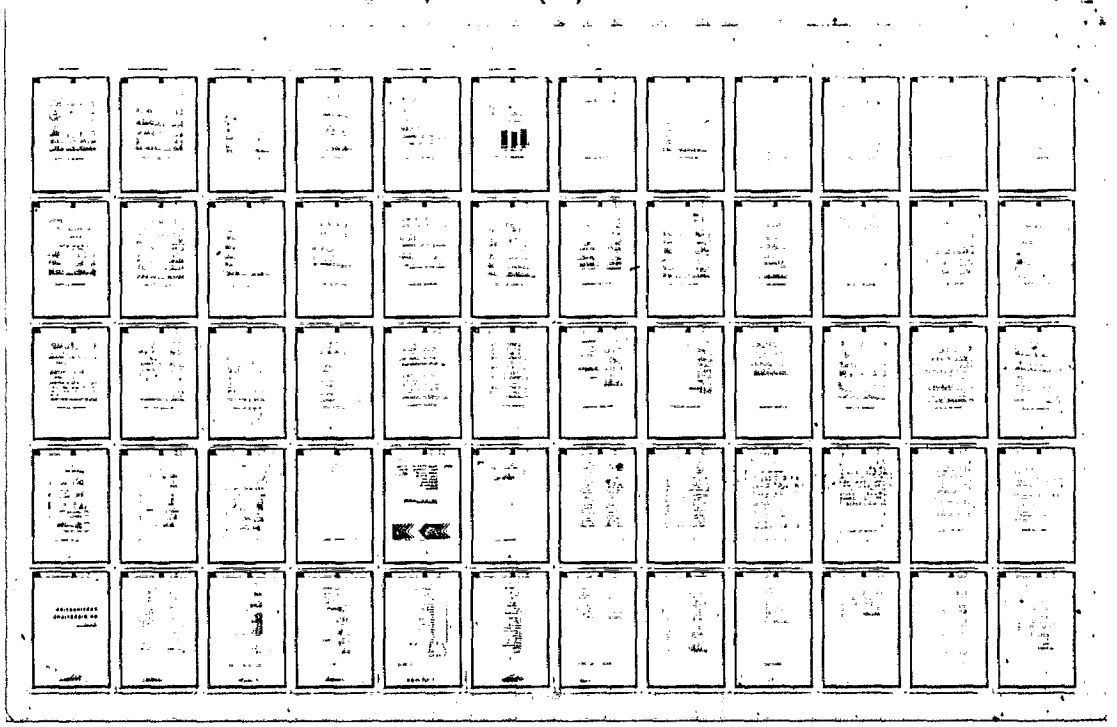

2029047699

Source: https://www.industrydocuments.ucsf.edu/docs/lydl0000

05 NOV 90

DRAFT--DO NOT QUOTE OR CITE

Note: The number (19 female cases) of never-smokers in this study is much too small to make even a large observed odds ratio (1.68) statistically significant. Further, combining ever-smokers and never-smokers (possibly to increase the sample size) makes the results difficult to compare with previous findings.

GAO. Gao et al. (1987) report the results of a large (1407 subjects) population-based case-control study of lung cancer etiology in Shanghai China, where lung cancer rates for women are among the highest in the world. Potential cases included all female patients with newly diagnosed primary lung cancer incident between February 1984, and February 1986, who were 35 to 69 years of age at the time of diagnosis and were residents of urban Shanghai. After exclusion of 93 patients who died, the remaining 672 cases were interviewed. Eighty-one percent were diagnosed by tissue biopsy or cytology and 19 percent by repeated x-ray. Adenocarcinoma was the predominant (61%) diaghosis. Controls were frequency-matched within five-year age strata and randomly selected from the general population of the Shanghai urban area. Of the total of 735 controls interviewed, only 9.7% were secondary controls, chosen mainly because the first selected control had moved from the Shanghai urban area or was found to be outside the eligible age range. The study includes 246 cases and 375 controls who were nonsmokers (presumably had never smoked cigarettes). Logistic models were used to estimate relative risks of disease adjusted for other study factors.

Among all subjects no significant increase in risk was observed for overall ETS exposure during childhood (OR = 1.1, 95% C.I. = 0.7 - 1.7) or adult life (OR = 0.9, 95% C.I. = 0.6 - 1.4). For these calculations, exposure was said to have occurred if the subject had ever lived with a smoker. However, when exposure was defined in terms of husbands' smoking and the analysis was limited to nonsmoking women, lung cancer risks tended to increase with the number of years of exposure, with the highest observed risk (OR = 1.7, 95% C.I. = 1.0 - 2.9)

2029047200

Source: https://www.industrydocuments.ucsf.edu/docs/lydl0000

occurring in the comparison of those with 40+ years of exposure to those with 20- years exposure, after adjustment for age and education (Table II). The relative risk in this comparison was higher (OR = 2.9, 95% C.I. = 1.0 - 8.9) for squamous- and oat-cell carcinoma alone. No test for trend over levels of ETS exposure was reported.

In the discussion of the results, the authors note the upward trend in risk associated with increasing years of exposure among nonsmoking women married to smokers. They conclude that ETS may be a contributing causative agent, but that other factors need to be considered as well, e.g., pre-existing lung disease, hormonal conditions, and especially exposure to cooking oil vapors.

Note: The study was not undertaken specifically to look at ETS lung association. Despite the large number of nonsmokers, it was not possible (or the authors chose not) to use women married to nonsmokers as a comparison group in their Table II. That may have been necessitated by the high prevalence of cigarette smoking among Chinese males.

GENG. In a brief article describing work similar in design and purpose to Gao et al, Geng et al (1987) report the results of their study of lung cancer risk factors among women living in Tianjin, where the rates of lung cancer mortality are the highest in China. All 157 female cases were resident in Tianjin for at least ten years and were pair-matched to 157 controls by sex, race, age (within 2 years), and marital status. Diagnosis was predominantly by histologic or cytologic review (84.7%), although computerized tomography (10.8%) and clinical or x-ray (4.5%) methods were also used to identify cases. The authors describe the case group as representative of Tianjin female lung cancer patients in terms of age and distribution of residents. They further state that the prevalence of smoking among the controls (40.8%) is similar to that seen among the Tianjin adult female population. The participation rates for cases and controls is not given, but other studies from China have reported very high response rates.

2029047201

Source: https://www.industrydocuments.ucsf.edu/docs/lydl0000

05 NOV 90

The study report available in the literature is fairly brief. Neither the method for assigning ETS exposure nor information about personal smoking status are discussed. Both multiple conditional regression and stratified analytic techniques were used to calculate reported risk estimates, but the authors do not stipulate which variables were controlled for in the analyses.

The authors report that among the odds ratios of passive smoking from husbands, fathers, mothers, and colleagues, only that from husbands is significant. However, it is not clear whether this applies to smokers and nonsmokers combined in the same analysis or whether the analyses of ETS were restricted to nonsmokers only. The authors do explicitly state in Table 5 that the odds ratio for lung cancer in nonsmoking women married to smokers is 2.16 (95% C.I. = 1.05 - 4.53), but it is not clear why this estimate differs from the odds ratio of 1.86 for nonsmoking wives with smoking husbands in Table 7. The odds ratios for lung cancer increase with the number of cigarettes smoked per day by the husband and the duration of exposure to the husband's smoking (Table 6). No tests for trend are provided, however, and whether these findings apply to all subjects as a group or only to the nonsmokers is not clear.

One interesting finding in Table 7 of this brief report is the similarity of estimated effects associated with ETS exposure from a husband only (OR = 1.86, 95% C.I. = 1.04 - 3.5) and active smoking by the wife only (OR = 2.61, 95% C.I. = 1.4 - 4.6). Further, these independent risks can be seen to interact on a multiplicative scale among smoking women married to smoking husbands (OR = 4.9, 95% C.I. = 1.8 - 9.5). The authors did not state whether these estimates were adjusted for other factors.

HUMB. The study by Humble and colleagues (Humble et al., 1987) includes 28 incident cases described by interview to be lifelong nonsmokers (8 men, 20 women). Cases were identified through the population-based New Mexico Tumor Registry while controls (130 men, 162

2029047202

Source: https://www.industrydocuments.ucsf.edu/docs/lydl0000

05 NOV 90

women) were chosen through randomly generated phone numbers and Health Care Financing Administration rosters of Medicare participants. Controls were frequency-matched to cases by ten-year age groups and by sex. Subjects were the nonsmoking subset in a larger study of lung cancer risk factors in which 88.5% of cases and 83.1% of controls eligible for interview had participated. Of the 28 lung cancers among nonsmokers, 24 had a histologic diagnosis in the Tumor Registry record. However, in a separate review of histologic materials for 17 of these cases, only eight cell types concurred with the Registry.

Subjects or their proxies were interviewed regarding their personal smoking habits, smoking by their spouses, and their occupational exposures. Surrogate interviews (usually with the spouse) were necessary for 19 of the 28 cases, but for only 13 of the 292 controls. No effect of information source was noted when analyses were run separately for self-reported and surrogate-reported cases using self-reported controls as the comparison group. Small numbers precluded a separate reporting of the OR for males.

An elevated risk of lung cancer was reported for all subjects combined and for females separately. Logistic models, which included adjustment for age and ethnicity and sex when appropriate, calculated ORs of 2.6 (90% C.I. = 1.2 - 5.6) for all subjects and 2.2 (90% C.I. = 0.9 - 5.5) for females. Risk increased with the duration of spousal smoking (chi-squared statistic for linear trend equals 2.01 for all subjects and 1.23 for females alone) in cross-tabular analyses, but not in results from multiple logistic models. No trend was seen over the average number of cigarettes smoked per day by the spouse. Separate analyses for current and former smokers revealed no increased risk associated with marriage to a smoker.

Cell-line specific analyses were precluded by the small number of cases with histologic confirmation of their diagnosis, the poor concordance of histologic designations in the Registry file, and the special review. The high proportion of cases with surrogate respondents may actually have improved the quality of data regarding exposure to a spouse's cigarette smoking, as

2029004703

Source: https://www.industrydocuments.ucsf.edu/docs/lydl0000

spouses were the principal source of surrogate data. Exclusion of four former smokers (by information from other sources) did not alter the results. Size of the case series allowed only crude stratification of duration and amount when testing for trends, and may explain the marginal significance of findings reported separately for women.

INOU. In a case-control study of smoking and lung cancer in two Japanese cities, Inoue and Hirayama (1987) identified 37 women who died with lung cancer. Twenty-eight of these women (75.7%) were nonsmokers (definition not given). Cases were matched for age, year of death (within 2.5 years), and residential district to 74 controls who had died of cerebrovascular disease. Sixty-two (83.8%) of the controls were nonsmokers. Husbands' smoking status was available for 29 of the 37 cases and 54 of the 74 controls. Interviews were used to gather data for analysis, but the authors do not describe the characteristics or degree of relatedness of the surrogate respondents. Neither do they describe the degree of cooperation among the study subjects.

The Mantel-Haenszel procedure was used to estimate the relative risks of disease associated with ETS, adjusted for age alone and for age and residential district (due to differences in socio-economic status of the two areas). The odds ratios, stratified by age and district, are 2.58 (90% C.I. = 0.44 - 5.7) when husbands smoked less than 19 cigarettes a day, and 3.09 (90% C.I. = 1.04 - 11.81) when husbands smoked 20 or more cigarettes a day. The chi-squared test for trend is significant ($p < 0.05$).

LAMT. The large case-control study by T.H. Lam and colleagues (Lam et al., 1987) assessed the respective roles of active and passive smoking in lung cancer etiology among women living in Hong Kong. Only patients with a pathologist's confirmation (98% by histological or cytological review) were included. Those with rare tumors, e.g., carcinoids, were excluded. Women were interviewed in the hospital and then age-matched to healthy female controls selected from

2029047204

Source: https://www.industrydocuments.ucsf.edu/docs/lydl0000

within their own neighborhoods. Interviews took place between 1983 and 1986 and approximately 99% of all eligible subjects responded. Never-smoker status for both subjects and their husbands was defined as having never smoked as much as one cigarette a day, or its equivalent in other tobacco products, for at least one year. A woman was considered exposed to her husband's tobacco smoke if she had lived with her smoking husband in the same household continuously for at least one year. If the husband was an ever- smoker, information on the type of tobacco and amount usually smoked per day by the husband and the duration of exposure was obtained. Never-married women were included as nonexposed to ETS. The authors describe the results of separate analyses on cigarettes only and on all forms of tobacco as similar and only report the latter. RR and 95% confidence intervals were calculated for each level of ETS exposure. The Fisher's Exact Test (two-sided) was used to check whether the RR was significantly different from unity. Multivariate methods do no appear to have been used.

Among the total of 444 cases and 443 controls were 199 cases and 335 controls who had never smoked and for whom data on husbands' smoking were available. For never-smokers the RR for lung cancer of all types from ETS exposure is 1.65 (95% C.I. = 1.16 - 2.35); for adenocarcinoma the RR is 2.12 (95% C.I. = 1.32 - 3.39). The risks for small and large cell carcinomas are 3.00 and 3.11, respectively, but these estimates are not statistically significant. Trends in relative risk for cancer at all sites, and for adenocarcinoma by the amount of tobacco smoked daily by the husband, are both significant with $p < 0.001$. The authors discount the possibility that misclassification bias could have lead to the observed results, given the low prevalence of smoking (4.1%) among women in Hong Kong and the strength of the findings in the present study.

LAMW. The dissertation of Lam (Lam, 1985) was the third case-control study of risk factors for lung cancer among females in Hong Kong. The nonsmoker cases, all with histologic or

2029047705

Source: https://www.industrydocuments.ucsf.edu/docs/lydl0000

cytologic confirmation of adenocarcinoma, were part of a larger case series of 161 interviewed Chinese female lung cancer patients diagnosed at a large, regional general hospital between January 1981 and April 1984. Fifteen cases with three other lung cancer histologies, as well as any patients with metastatic disease, were not included. Nonsmoking controls (n = 144) were part of a larger series of 185 Chinese, mostly lower income female patients admitted to the orthopedic wards between 1982 and 1984. Cooperation of potential subjects exceeded 90%.

There was little difference in the ages, occupations, years of schooling, or recent residences of the 161 cases and 185 controls, so the author deemed it unnecessary to control for (stratify on) these variables in the analysis of the 60 nonsmoking cases with adenocarcinoma and 144 nonsmoking controls. Exposure to ETS was categorized separately for husbands and other sources, e.g., cohabitating relatives or coworkers. Subjects were also queried regarding exposure to smoke from kerosene stoves and incense. The author interviewed all cases and, with a single research assistant, all controls. Thus, one may assume that interviews were not "blind."

The strongest and most statistically significant associations of ETS were with peripheral adenocarcinoma, with the highest odds ratio (2.64) occurring when exposure was based solely on husbands' smoking behavior. Estimates of relative risks of 1.6 and 1.7 were found for centrally located tumors when ETS was based on the husband's habits and total exposure to passive smoking, respectively. When data from Table 7.5 of the study are summed over sites, relative risks of approximately 2.0 are obtained with $p < 0.05$, regardless of exposure classification scheme. All odds ratios appear to be unadjusted for any other study factors. No statistically significant risks from kerosene or incense were found. The author concludes that the small sample size and use of only a single hospital source for subjects are limitations. Logistic regression was used in the statistical analysis, along with Bayesian risk-ratio procedure.

2029047706

Source: https://www.industrydocuments.ucsf.edu/docs/lydl0000

SHIM. Shimizu and his colleagues (Shimizu et al., 1988) use a hospital-based case-control study of lung cancer in women to examine the effect of involuntary exposure to tobacco smoke from a variety of sources. Among 118 female patients with histologically confirmed lung cancer, 90 reported having never smoked cigarettes. Cases were matched on hospital, age (within 1 year), and date of admission to patients being seen for conditions generally unrelated to tobacco use. All subjects were asked to complete a questionnaire about occupational history, kinds of fuels used for cooking and heating, and smoking habits, including number of cigarettes smoked daily by parents, siblings, the husband, and the husbands' parents in the home, as well as the amount of time spent in the same room with the husband, and the duration of marriage. ETS exposure at work was simply categorized by presence or absence of smokers.

No association was observed between risk of lung cancer and smoking by husbands, fathers, siblings, or coworkers. However, increased odds ratios were seen for smoking by subjects' mothers (OR = 4.0, $p < 0.05$) and by their husbands' fathers (OR = 3.2, $p < 0.005$). Dose-response relationships were not apparent for exposure by the mother or the husband's father, but the authors suggest that subjects may have been unable to recall the exact number of cigarettes in some cases (especially in childhood).

It is not clear whether variables such as occupational exposure to iron and other metals, or type of heating fuel, were assessed. Neither is there mention of cooperation rates by cases and controls. Adjustment of odds ratios for smoking by mother, smoking by husbands' father, and occupational exposures to iron and other metals, caused modest reductions in the point estimates, although smoking by husband's father in the home, (adjusted OR = 3.2) is still significant with $p < 0.005$. The authors describe this association as plausible since a high proportion of Japanese wives live with their in-laws after marriage and their father-in-law may have already retired.

2029047207

Source: https://www.industrydocuments.ucsf.edu/docs/lydl0000

05 NOV 90

SVEN. The study of lung cancer etiology in women who had never been regular smokers by Svenson et al. (1988) includes 34 cases with microscopically confirmed non-carcinoid cancer. Cases were patients referred to one of four clinical departments that diagnose or treat lung cancer in Stockholm county, Sweden. Only patients who would not benefit from specialist care, or who were not in physical or mental condition to allow an interview, were excluded from eligibility. Cases were matched on age using random selection from the population register in Stockholm County. Only seven subjects refused to be interviewed, resulting in a sample of 210 cases and 209 controls. Cooperation of nonsmoking cases and their matched controls was presumably high as well.

Four physicians completed all interviews using a structured questionnaire that included ETS exposure during childhood, as well as domestic and work environment exposure during adulthood. Other questions concerned the consumption of foods rich in vitamins A and C, and information about the dwellings where a subject had lived for more than two years. No surrogate sources of information were used and squamous/small cell carcinomas constituted 57.9% and 20.6% of the case histologies, respectively.

Women who lived with a smoking mother as children (RR = 3.3), or were exposed to ETS both at home and at work (RR = 2.1), or were exposed both as children and as adults (RR = 1.9), showed the highest risks. However, all estimates had very wide confidence intervals owing to the small sample size, and tests of association between ETS exposure and lung cancer incidence and tests for trend were all nonsignificant.

The authors describe the results for ETS as inconclusive, but note that most estimates of relative risk are greater than unity. The statistical power to detect an increased risk of 50% from exposure to ETS was only about 0.1. The author suggests that information bias may have precluded the identification of statistically significant small increases in risk. Specifically, no information on the duration or intensity of ETS exposure was obtained in the study, so it was

2029047708

Source: https://www.industrydocuments.ucsf.edu/docs/lydl0000

08 NOV 90

difficult to assess the relative importance of domestic and workplace exposures. Several statistical methods were applied to the data, including stratified analyses and multiple logistic regression.

VARE. The case-control study described by Varela in his 1987 dissertation (Varela, 1987) is based on 439 histologically confirmed primary lung cancer cases incident in nonsmokers over an 18-month period in upstate New York. Sample size requirements were set large enough that detection of a relative risk of the size reported by Hirayama and Trichopoulos would be likely. However, to reach the calculated requirement of 450 matched case-control pairs, it was necessary to include former smokers (55% of sample) in addition to never-smokers. Cases were identified through a special rapid reporting system in all participating hospitals and through periodic review of the New York State Cancer Registry. Controls were matched to cases on residence, age (within 5 years), sex, smoking history, and whether the interview was with the subject (67%) or with a surrogate (33%). Standardized interviews were conducted to collect data describing exposure to a spouse's cigarette smoke in terms of cig./day, total years of smoke exposure, and total cigarettes smoked during the marriage. Information was also collected on total exposure from all smokers in the household, from coworkers on the job, and from exposure in social circumstances. The potentially confounding variables considered in the analysis include religion, income, marital status, other occupational exposures, and number of cigarettes smoked/day for former smokers. The study's total of 439 cases represents a cooperation rate of 84% among those selected for interviews.

The author provides a systematic and exhaustive analysis based on linear logistic models for pairwise matched data. These data were collected as continuous values to allow analysis by source of exposure, e.g., spouse, other household smokers, coworkers, and social encounters, using methods for both continuous data and for categorical data. Analysis of household exposure

2029047709

Source: https://www.industrydocuments.ucsf.edu/docs/lydl0000

05 NOV 90

was further complicated by the use of two alternative assumptions regarding missing data for exposure at previous residences.

After extensive analyses no index of exposure to spouse's tobacco or smoking by coworkers was associated with an increased risk for lung cancer. However, person-years of total exposure from all smoking household members showed a statistically significant linear trend. When exposure was fitted as a continuous variable, the unadjusted odds ratio associated with 150 person-years of exposure was 1.86 (95% C.I. = 1.22 - 2.83). Adjustment for the potentially confounding variables listed above reduced the OR for 150 person-years of exposure to 1.56 (95% C.I. = 1.00 - 2.41). Exposure to passive smoke in social situations showed an anomalous protective effect in both adjusted and unadjusted models (Tables 20 to 22 and Figures 25 to 28).

Note: The study contains extensive statistical analyses of which only a small part have been described here. When a large number of tests are made, the likelihood that one or more statistically significant results will occur by chance alone increases. This can cause results to be interpreted as more significant than may be justified.

The author suggests that his own finding of no effect from exposure to spouses' smoke is understandable because the smoking habits of a spouse may not accurately describe true exposure to passive smoke. By contrast, the household exposure variable which was designed to more fully capture exposure in the home was the only index that was associated with increased risk of disease in this study. The greater association of household exposures with epidermoid and small cell histologies (Tables 12, 13, 15, 16) is not inconsistent with the apparent specificity of effect observed in PERS and GARF. One difficulty with comparing the Varela study with other case-control studies is the inclusion of either males with females or ex-smokers with never-smokers, in the reported results. Although the analysis is very comprehensive, no reports for the risk of female never-smokers alone were found. The author suggests that differences in past smoking habits of cases and controls may have a confounding effect. Although identical

2029047710

Source: https://www.industrydocuments.ucsf.edu/docs/lydl0000

proportions of cases and controls were former smokers, cases had smoked a larger number of cig./day (28.9 vs. 23.8, p = 0.0002). Former smokers were not included, however, unless they had stopped smoking at least ten years prior to the interview. The author questions the validity of an apparent significant protective association from ETS in social circumstances, suggesting the possibilities of biased reporting and questionnaire artifacts as alternative explanations for this finding.

WU. Wu and her coauthors (Wu et al., 1985) report the effects of ETS exposure as part of a larger study of determinants of lung cancer among white women living in Los Angeles County. Eligible cases included only patients with microscopically diagnosed primary adenocarcinoma (ADC) or small cell carcinoma (SCC) of the lung, incident between April 1, 1981, and August 31, 1982. Subjects also had to be English-speaking residents and less than 76 years old at the time of diagnosis. One neighborhood control was individually matched to each interviewed case using date of birth (within five years).

From a total of 490 eligible cases (smokers and nonsmokers), 190 were dead or too ill to participate, eight could not be located and 44 refused to be interviewed, leaving 220 (44.9%) as the interviewed case group. After replacement of 85 potential controls who refused to participate, 220 controls were also interviewed. Surrogate respondents were not used because they were thought to be an unreliable source of information for ETS exposures and dietary practices in childhood. this article reports 29 cases (ADC) with 62 controls, but does not include the percentages exposed to spousal smoking. Also, it is noted that 15 pairs of the ADC were deleted from the analysis because either the case or control was never married.

Cases and controls were interviewed by telephone regarding personal smoking habits, exposure to ETS, history of lung diseases; dietary intake of vitamin A, types of heating and cooking fuels used, and reproductive history. Information obtained about childhood exposure to

2029004711

Source: https://www.industrydocuments.ucsf.edu/docs/lydl0000

ETS included the amount and years of smoking by fathers, mothers, and other household members. Questions on exposure in adulthood pertained to smoking habits of spouses and other household members.

Study data were adjusted for potential confounding variables by application of logistic regression. Estimates for the relative risk of ADC are provided separately for nonsmokers, ex-smokers, and current smokers, but a small number of occurrences precluded the corresponding calculations for SCC. For ADC and SCC among smokers and nonsmokers combined, no significantly increased risks were observed due to smoking by the subject's mother, father, spouse, or coworkers after adjustment for personal smoking habits. For the 29 nonsmoking ADC cases exposed to passive smoke, no significant elevated risk was associated with ETS exposure from a mother who smoked, a father who smoked, a spouse who smoked, or from the workplace. The observed relative risk for ADC increases with the number of years of adult ETS exposure from spouse(s) and coworkers, but a test for trend is not statistically significant. The authors attribute the ambiguous nature of their results to the lesser etiologic role of ETS for ADC compared to SCC. Further, 12 (41%) of the 29 ADC cases are bronchoalveolar cell carcinomas, which Correa et al. (1983) found to have a relatively weaker association with passive smoking.

2029047712

Source: https://www.industrydocuments.ucsf.edu/docs/lydl0000

05 NOV 90

APPENDIX B

MATHEMATICAL FORMULAS AND RELATIONSHIPS

ADJUSTING RELATIVE RISK FOR SMOKER MISCLASSIFICATION AND BACKGROUND ETS EXPOSURE

The formula relating observed relative risk (RRO) and the value after adjustment for misclassification (RRM) is shown in Equation B1 below, with terms described in Tables B-1 and B-2. The calculational procedure is similar to that of Wald et al. (1986), except that separate terms for former smokers and current smokers are retained (instead of being combined into a single term for ever-smokers) and distinction is made between "correct" values and "reported" values, e.g., for the number of never-smokers. It may be noted that an assumption of additive risks due to current or former smoking, and exposure to spousal smoke, is implicit.

$$RRO = UY/VX \qquad (B1)$$

where $U = [(C_c-C_r)/N_r]P(E/C)RR(E/C)$

$+ [N_d/N_r]P(E/N)RR(E/N)$

$+ [(F_c-F_r)/N_r]P(E/F)RR(E/F)$,

V is The same as U with the terms for RR omitted,

$X = [(C_c-C_r)/N_r]\,[1-P(E/C)]\,RR(E/C)$

$+ [N_d/N_r]\,[1-P(E/N)]\,RR(E/N)$

$+ [(F_c-F_r)/N_r]\,[1-P(E/F)]\,RR(E/F)$,

Y is The same as X with the terms for RR omitted,

$RR(E/N) = RRM$, the relative risk after adjustment for misclassification, and

$RR(E/C) = RR(U/C) + (RRM - 1)$,

$RR(E/F) = RR(E/F) + (RRM - 1)$.

2029090727 13

Source: https://www.industrydocuments.ucsf.edu/docs/lydl0000

05 NOV 90

TABLE B-1. DEFINITION[1] OF TERMS IN EQUATION B1 RELATING OBSERVED RR (RRO) AND ITS VALUE ADJUSTED FOR MISCLASSIFICATION (RRM)

Term	Description
N_r	Reported number of NS (never smokers)
N_c	Correct number of NS (never-smokers)
C_r	Reported number of CS (current smokers)
C_c	Correct number of CS (current smokers)
F_r	Reported number of FS (former smokers)
F_c	Correct number of FS (former smokers)
P(E/N)	Proportion of NS exposed[2]
P(E/C)	Proportion of CS exposed[2]
P(E/F)	Proportion of FS exposed[2]
RR(E/N)	Risk of lung cancer death (LCD) for NS exposed, relative to NS unexposed[3]
RR(E/C)	Same as RR(E/N) except for CS exposed[3]
RR(E/F)	Same as RR(E/N) except for FS exposed[3]
RR(U/C)	Same as RR(E/N) except for CS unexposed[3]
RR(U/F)	Same as RR(E/N) except for FS unexposed[3]

[1] Table applies to marrieds.

[2] "Exposed" means married to a smoker.

[3] RR(E/N) equals RRM in the text notation.
RR(U/C) is the relative risk of smoking, a parameter value.
RR(U/F) is the relative risk of former smoking, a parameter value.
RR(E/C) = RR(U/C) + (RR(E/N) - 1). Assumes relative risk of exposed smoker is the sum due to smoking and spousal exposure to ETS.
RR(E/F) = RR(U/F) + (RR(E/N) - 1). Same assumption as for RR(E/C) except applied to former smokers.

2029004714

Source: https://www.industrydocuments.ucsf.edu/docs/lydl0000

TABLE B-2. PARAMETERS AND THEIR ALTERNATIVE SPECIFICATIONS REQUIRED FOR EQUATION (B1)

Parameter Identifier	Appears in (B1) ?	Parameter[1]	Description
V1	Y	$(C_e-C_r)/N_r$	Proportion of reported never-smokers (NS) who are current smokers (CS)
V2	Y	$(F_e-F_r)/N_r$	Proportion of reported NS who are former smokers (FS)
V3	Y	N_r/N_r	Proportion of reported NS who are NS
V4	Y	P(E/N)	Proportion of NS exposed (married to a smoker)
V5	Y	P(E/C)	Proportion of CS exposed
V6	Y	P(E/F)	Proportion of FS exposed
V7	Y	RR(U/C)	Risk of misclassified CS, not exposed, relative to NS, not exposed
V8	Y	RR(U/F)	Risk of misclassified FS, not exposed, relative to NS, not exposed
V9	Y	RR(E/N)	Risk of NS, exposed, (= RRM) relative to NS, not exposed
V10	Y	RR(E/C)	Risk of misclassified CS, exposed, relative to NS, not exposed
V11	Y	RR(E/F)	Risk of misclassified FS, exposed, relative to NS, not exposed
V12	N	C_r/T	Proportion of subjects reported to be CS
V13	N	C_c/T	Proportion of subjects correctly classified CS
V14	N	$(C_e-C_r)/C_e$	Proportion of CS reported to be NS
V15	N	N_r/T	Proportion of subjects reported to be NS
V16	N	N_c/T	Proportion of subjects correctly classified as NS
V17	N	F_r/T	Proportion of subjects reported to be former smokers
V18	N	F_c/T	Proportion of subjects correctly classified FS
V19	N	$(F_e-F_r)/F_e$	Proportion of FS reported to be NS

[1] "T" is the total number of subjects.

2029047715

Source: https://www.industrydocuments.ucsf.edu/docs/lydl0000

RRO is just a ratio of weighted relative risks. The term U, v applies to exposed subjects and X/Y applies to unexposed subjects. To make the relationship more transparent, consider the special case where the proportion of all subjects (regardless of their own smoking habits) married to a smoker is one-half and there is no misclassification of former smokers. Then RRO can be written as RRO = A/B, where A = (no. of misclassified CS exposed) times (their relative risk) + (no. of correctly classified NS exposed)times(their relative risk) and B is the same as A except with "exposed" replaced by "unexposed." All of the relative risk terms are relative to the same value (the lung cancer risk in unexposed never-smokers) so the ratio A/B is the risk observed in exposed subjects relative to the risk observed in unexposed subjects.

The terms in expression Equation B1, stated as proportions of the number of reported never-smokers (N_r), may need to be converted from alternative parameter specifications. For example, the misclassification rate of current smokers, $(C_e - C_r)/C_e$, may be specified instead of the proportion of reported misclassified current smokers, $(C_e - C_r)/N_r$. In the literature, "misclassification" is usually referred to as a percentage or proportion of a reference group, but authors do not all have the same reference group in mind. Conversion of parameters make some values more interpretable, as well. Formulas for conversion of parameters between reported and correct classifications are given in Table B-3.

The procedure used to account for ETS exposure from sources other than spousal smoking is described in the NRC report (1986). It is assumed that lifetime lung cancer risk from exposure to ETS is linear in the range of environmental exposures to ETS. RRM is the risk of never-smokers (NS) exposed (e.g., married to smoker) to ETS relative to unexposed NS (e.g., married to a never-smoker). Both the exposed and unexposed NS experience ETS from sources other than what differentiates their classification in epidemiologic studies (typically, "exposed" means married to a smoker).

2029047716

Source: https://www.industrydocuments.ucsf.edu/docs/lydl0000

The terms RRB and RRM denote the risk of exposed NS relative to NS with zero exposure to ETS, and relative to an unexposed NS, respectively, where an "unexposed" NS is not married to a smoker but experiences ETS from other sources collectively referred to as background sources.

TABLE B-3. CONVERSION OF PARAMETERS BETWEEN REPORTED AND CORRECT CLASSIFICATIONS

From Correct Values to Reported Values

Let $W = (V13)(V14) + V16 + (V18)(V19)$

$V1 = (V13)(V14)/W$

$V2 = (V18 + V19)/W$

$V3 = V16/W$

From Reported Values to Correct Values

$$V14 = \frac{(V1)(V15)}{(V1)(V15) + V12}$$

$V16 = V15 - (V1)(V15) - (V2)(V15)$

$$V19 = \frac{(V2)(V15)}{(V2)(V15) + V17}$$

20290727

Source: https://www.industrydocuments.ucsf.edu/docs/lydl0000

If R(E), R(U), and R(TU) denote the absolute risk (lifetime probability of lung cancer) for exposed, unexposed, and truly unexposed (no background exposure to ETS) NS, respectively, then RRM = R(E)/R(U), RRB = R(E)/R(TU), and R(U)/R(TU) = RRB/RRM.

Let Z be the ratio of (1) the excess risk of exposed NS relative to truly unexposed NS, and (2) the excess risk of unexposed NS relative to a truly unexposed NS. Then, Z = (1)/(2) = (RRB-1)/(RRB/RRM - 1). In this report, Z = 3 is assumed (see Section 4.4.4). RRM is the observed relative risk (RRO) after adjustment for smoker misclassification. For values of Z and RRM,

$$RRB = (1 - Z)/(1 - Z/RRM) \qquad (B2)$$

POPULATION-ATTRIBUTABLE RISK (PAR)

Let RRB and RRM be as defined previously. The population-attributable risk is the ratio of the excess risk due to ETS exposure to the total risk from all sources.

$$PAR = \frac{P(E/N)(RRM - 1) + (RRB-RRM)}{P(E/N)(RRM - 1) + (RRB-RRM) + 1} \qquad (B3)$$

where P(E/N) is the proportion of NS exposed to ETS. Note that all NS are at risk from background exposure (the term RRB - RRM) and the exposed persons have an additional risk from ETS exposure (the term RRM - 1).

LUNG CANCER DEATHS IN FORMER SMOKERS ATTRIBUTABLE TO ETS

It is assumed that the RR of lung cancer from exposure to ETS is the same for former smokers (FS) and never-smokers (NS). The number of lung cancer deaths per year in FS due to ETS exposure is approximated from the ratio of the number of FS to the number of NS in the U.S. population times the estimated number of lung cancer deaths for NS (1750 women, 810 men). The number of NS (FS) in the 1985 U.S. population is 55.4 million (17.1 million) women

2029004718

Source: https://www.industrydocuments.ucsf.edu/docs/lydl0000

05 NOV 90

and 32.8 million (29.1 million) men (Table 2, U.S. SG [1989]). The estimated number of lung cancer deaths in FS is 540 women and 720 men, for a total of 1260.

2029047719

Source: https://www.industrydocuments.ucsf.edu/docs/lydl0000

DRAFT--DO NOT QUOTE OR CITE

APPENDIX C

DOSIMETRY OF ENVIRONMENTAL TOBACCO SMOKE

C.1. INTRODUCTION

The biological relationship between exposure to tobacco smoke and lung cancer risk has been the subject of much research. The constituency of tobacco smoke is a complex mixture of chemicals, a number of which have been classified as carcinogens, with varying weights-of-evidence. Research continues toward identifying the agents of tobacco smoke, and their combinations, that account for the carcinogenic risk to the lung and other organs. In addition to knowledge of the chemical agents of interest, a part of the biological puzzle concerns the intake, uptake and organ deposition of the chemicals. Once organ dose is determined, the problem concerns the process by which dose poses a cancer risk. In this last step, pharmacological research, dose-response data from animal or epidemiological studies, and quantitative models all contribute toward estimating the magnitude of increased cancer risk associated with environmental exposure levels. The following discussion addresses the second of the three steps above, the determination of target organ dose (or surrogate) of chemicals present in tobacco smoke, in particular the dose to the lung. A general mathematical framework is given that applies to both active and passive smoking. It will be helpful first to review briefly the current knowledge base regarding carcinogens in tobacco smoke.

The constituents of tobacco that have been identified as carcinogens, largely in animal studies, are discussed in several sources, e.g., NRC, 1986; U.S. SG, 1986; IARC, 1987, Hoffmann and Hecht, 1989. The relative concentrations in sidestream (SS) and mainstream (MS) smoke vary over a range of severalfold, for both the particulate and vapor phases. Hoffmann and Hecht (1989) classify the tumorigenic agents in tobacco and tobacco smoke as polycyclic aromatic hydrocarbons (PAH), aza-arenes, N-nitrosamines, aromatic amines, aldehydes,

2029047720

Source: https://www.industrydocuments.ucsf.edu/docs/lydl0000

inorganic compounds, and miscellaneous organic compounds. Particularly relevant to active smoking are the PAH, N-nitrosamines (notably NNK or NNK-4-(methyllnitrosamino)-1-(3-pyridyl)-1-butanone), and the aldehydes. Based on animal bioassays, the levels of exposure to active smokers of PAH and NNK are sufficient to be potential causative agents of respiratory tract cancer. More specifically, likely causative agents for cancers of the lung or larynx from active smoking include: PAH, with enhancing agents catechol (a cocarcinogen) or a weakly acidic tumor promoter; NNK, with enhancing agents acrolein or crotonaldehyde (some uncertainty in the latter); acetaldehyde; formaldehyde; and Polonium-210, a minor factor (Table 4, Hoffmann and Hecht, 1989).

Of course it is unknown exactly which constituents of tobacco smoke, active separately or in combination, account for the lung cancer risk in active smoking and may pose a risk to passive smokers. It is unlikely that causative agents are exclusive to either the particulate or vapor phase, so both phases need to be considered. The level of detail that can be included in modeling lung exposure requires knowledge of parameter values and information on biological mechanisms to describe them by equations. The most refined level, biologically-based modeling, potentially provides a sensitive means by which to compare and contrast features of active and passive smoking. This is particularly relevant because active smoking has been the subject of much research in the past. Typical exposure levels to environmental tobacco smoke (ETS) can be evaluated under suitable models, the sensitivity of selected parameters tested, and parameters identified that may help to characterize potentially hypersusceptible subpopulations. Aside from the differences in the composition of SS and MS smoke, active and passive smoking ostensibly differ in fundamental ways that must be considered. Active smokers are exposed to high concentrations of inhaled smoke for short durations while passive smokers are exposed to lower concentration at their typical volumetric breathing rate over a more extended time period. Additionally, the active smoker is generally a passive smoker as well.

2029047721

Source: https://www.industrydocuments.ucsf.edu/docs/lydl0000

05 NOV 90

There are some common features of intake, uptake, and lung deposition for agents in the particulate phase of tobacco smoke that depend on particle size and density. This makes it useful to consider the particulate and vapor phases separately in a mathematical model. Unlike the particulate phase, constituents of the vapor phase may not have any parameter values in common and thus have to be treated individually. When a chemical occurs in both phases, the biokinetics are determined separately for the two phases, at least prior to entry into cells and tissues.

For the general framework described in the next section to be useful for cancer risk assessment, it is necessary to assume that the contribution of ETS to cancer risk in the lung depends primarily on dose to the lung (although host factors will modify this risk). The model identifies the parameters needed for dose determination and their interrelationship. Since values for parameters, or data from which to estimate them, are not always available in practice, several measures related to exposure are provided to accomodate the level of detail in the information available. These include, in increasing order of refinement and information required: exposure concentration (in room air), cumulative exposure, lung intake, lung uptake, lung burden, lung dose, and dose distribution in systemic organs.

Although many aspects of the biokinetics of passive smoking and active smoking are not fully understood, much is known about critical and separate features of passive and active smoking. Quantitative modeling reveals the structure and interrelationship of the basic biokinetic features, serves to identify areas of research needed, and shows where assumptions are required to bridge current gaps in knowledge regarding mechanisms or chemical properties. In this sense a quantitative model that integrates the current knowledge base over several disciplines is a useful guide to the current state-of-knowledge and future research needs. It also contributes to evaluation of dose surrogates for ETS and the potential comparative basis for lung cancer risk from active and passive smoking.

2029047722

Source: https://www.industrydocuments.ucsf.edu/docs/lydl0000

08 NOV 90

C.2. GENERAL ISSUES

C.2.1. The Lung

Suppose we are interested in a mixture of chemicals such as ETS, where these chemicals may exist either in the vapor or particulate phase. In general, the vapor phase chemicals are inhaled and absorbed in the lung with characteristics specific to that chemical, i.e., the diffusion coefficient and solubility coefficient for that chemical in lung tissue. The chemicals existing in the particulate phase, however, are inhaled and deposited with characteristics specific to the particle size with which the chemicals are associated. For this reason, it is necessary to understand the aerodynamic properties of inhaled particles. To differentiate between the vapor and particulate phase of a chemical, the subscript v (for vapor) will be employed, while the subscript d (for the particle's aerodynamic diameter) will be employed for the particulate phase chemicals.

The simplest, but most approximate, measure of dose from a chemical is its concentration in air. This concentration typically is referred to as the exposure intensity and denoted by C. An index i will refer to the ith chemical of a mixture contained in ETS. The subscripts v and d will denote the vapor phase and particle phase, respectively, with d taking a particular value for particle diameter. For example, $C_{N,0.5}$ is the concentration of the Nth chemical, e.g., nicotine (g/m^3), attached to aerosol particles of diameter 0.5μ. Then $C_{N,v}$ would denote the concentration of nicotine (also in g/m^3) in the vapor phase. The total exposure intensity for nicotine would be the sum of $C_{N,0.5}$ and $C_{N,v}$ although this should not be interpreted as a reduction of the two phases to a common measure of dose. The subscripts for chemical and vapor phase will be omitted for ease of reading, except as needed. Since the incidence of effect per unit concentration can be quite different for these two components, total exposure intensity may act as a poor measure of risk.

20290H7723

Source: https://www.industrydocuments.ucsf.edu/docs/lydl0000

The cumulative exposure, Ψ, over a time interval [0, T] is

$$\Psi(T) = \int_0^T C(t)dt, \qquad (1)$$

where C(t) is the concentration of the chemical in air at time t. At constant concentration C,

$$\Psi(T) = C \times T. \qquad (2)$$

The total cumulative exposure over [0,T] is obtained by summing all contributions from the various phases in units of gram-days per liter of air (g-d/L).

The total amount of inhaled chemical will be referred to as the lung intake, I. Let V be the volumetric breathing rate (L/min), which equals the product of the tidal volume (L) and the breathing frequency (min^{-1}). The value of V may change with age (Crawford-Brown, 1987), in which case the dependence of V on an individual's age can be made explicit in the notation. The lung intake for the ith chemical during an interval of length T is

$$I(T) = V \times \Psi(T). \qquad (3)$$

The intake is in grams of the chemical considered.

With the exception of radionuclides, an inhaled chemical must deposit onto the walls of the lung to yield damage. The quantity of a chemical deposited in the lung over a time period [0,T] is the lung uptake, U(T). Typically, the relationship between intake and uptake will vary dramatically between the phases of a chemical due to differences in deposition and absorption processes. The uptake to the lung equals the product of the intake and the fraction "f" of the chemical deposited onto the surface of the lung. The total uptake to the lung then is

$$U(T) = f \times I(T). \qquad (4)$$

20290H72H

Source: https://www.industrydocuments.ucsf.edu/docs/lydl0000

For the vapor phase, the value of "f" depends on the specific chemical and often is unknown (although it may be infered from solubility coefficients if these are developed in future studies). For the particulate phase, the dominant environmental factor affecting f is the aerodynamic diameter, d, of the particle. In general, f_j will also be a function of the age of the individual, the state of activity, i.e., whether resting or working, the hygroscopicity of the particles, i.e., their ability to grow by gaining water in the lung, and the state of health of the individual. The uptake U is in grams of the chemical considered.

Lung uptake must be refined further in order to account for the structure (anatomy) of the lung. As described elsewhere (Weibel, 1963), the lung may be depicted as a series of bifurcating passageways that branch into smaller passageways as one moves from the proximal (near the mouth) to the distal (deep lung) locations in the lung. A simplified version of this branching scheme has been adopted by the International Commission on Radiological Protection (ICRP) in its report on lung modeling (ICRP, 1966). The ICRP model divides the lung into three distinct subsections or regions, each with a specific value of f. These regions are the naseopharyngeal (NP) region, consisting of the nose and pharynx; the tracheobronchial (TB) region, which extends from the trachea down to the terminal bronchioles; and the pulmonary (P) region of the lung, where gas exchange occurs between the alveolar sacs and the bloodstream. A schematic of the lung is shown in Figure C-1.

The value of f differs between the three regions of the lung due to differences in airflow and the size of passageways. To reflect this situation, let f_{NP}, f_{TB}, and f_P be the deposition fractions in the NP, TB, and P regions, respectively. Their values will depend upon the phase of the inhaled chemical. The uptake in each of the three regions over [0,T] is obtained from Equation 4

$$U^p(T) = f_p \times I(T) \qquad (5)$$

2029047725

Source: https://www.industrydocuments.ucsf.edu/docs/lydl0000

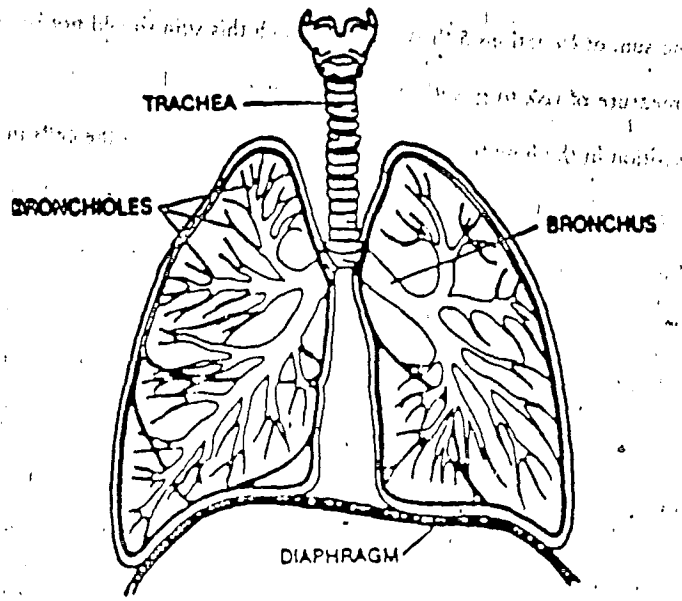

FIGURE C-1. THE GENERAL ANATOMY OF THE LUNG FROM THE TRACHEA DOWN TO THE DISTAL BRONCHIOLES

2029047726

Source: https://www.industrydocuments.ucsf.edu/docs/lydl0000

05 NOV 90

$$U^{TB}(T) = f_{TB} \times I(T) \quad (6)$$

$$U^{NP}(T) = f_{NP} \times I(T). \quad (7)$$

Each term may be subscripted further to indicate the chemical and its phase. The total lung uptake equals the sum of Equations 5 through 7, although this sum should not be construed as an appropriate measure of risk to specific cells of the lung.

After deposition in the lung tissue, a chemical must interact with the cells in order to produce an effect. In general, the probability of this interaction increases as the residence time of the chemical in the tissue increases. Because of this factor, it is necessary to specify a retention function R(t), describing the fraction of a chemical remaining in that tissue at a time, t, after uptake. For the pulmonary region, R(t) results from the translocation of the chemical across the alveolar membrane and into the bloodstream (with some contribution by engulfment into macrophages). For the TB and NP regions, R(t) is controlled by the movement of the mucociliary blanket towards the esophagus and, ultimately, into the gastrointestinal (GI) tract.

For the TB region, the retention can be influenced by the particular pattern of deposition within the separate generations of that region. A further complication arises due to the possibility of enhanced deposition at the bifurcations of airways (Martonen and Hoffmann, 1986), where movement of the mucociliary blanket will be slower. We will assume that a chemical deposited in the TB region may be characterized by a single retention function, however, since more refined characterizations are not feasible at present.

The amount of a chemical present in a region of the lung at time, t, is the *organ burden*, B(t). For the case of an acute, i.e., instantaneous, uptake denoted by U_0, the burden is

$$B(t) = U_0 \times R(t), \quad (8)$$

20290727

Source: https://www.industrydocuments.ucsf.edu/docs/lydl0000

where the unit of B(t) is grams. The quantities B, U, and R may be subscripted by chemical and phase, and may be divided into the three separate regions of the lung.

For protracted exposures over a time interval of length T > 0, the calculation of B(T) requires a convolution integral (Checkoway et al., 1989). The burden of a chemical in the lung regions is described by

$$B^{P}(T) = \int_0^T \dot{U}^{P}(t)R_{P}(T-t)dt, \qquad (9)$$

$$B^{TB}(T) = \int_0^T \dot{U}^{TB}(t)R_{TB}(T-t)dt, \qquad (10)$$

and

$$B^{NP}(T) = \int_0^T \dot{U}^{NP}(t)R_{NP}(T-t)dt. \qquad (11)$$

In these equations $\dot{U}$ is the rate of uptake into the separate lung regions. When concentration C is constant over time, simplifications follow as demonstrated earlier. The unit of burden in the lung region of interest is grams. Further subscripting to account for chemical and phase continues to be omitted.

The rate at which damage is produced in a tissue at time t is assumed to be proportional to the *dose-rate*, $\dot{D}(t)$, in the tissue (Checkoway et al., 1989), and the dose-rate is assumed to be proportional to the burden, B(t). Under these assumptions,

$$\dot{D}(t) = K \times B(t), \qquad (12)$$

where K is a proportionality constant that depends upon the particular chemical and tissue. In essentially all cases, with the exception of radionuclides, it is not possible to specify a value of K for chemicals because the important molecular damage is neither specified nor measured.

20290772B

Source: https://www.industrydocuments.ucsf.edu/docs/lydl0000

Unfortunately, not knowing the value of K for different chemicals precludes combining burdens from across chemicals to yield a single estimate of the dose-rate from ETS.

The total *dose* to an organ (or lung region) is the integral of the dose-rate over the time interval of interest

$$D(T) = \int_0^T D(t)dt. \quad (13)$$

Substituting Equations 9, 10, or 11 into Equation 12, and substituting this into Equation 13, yields

$$D(T) = K \times V \int_0^T \int_0^T C(\tau) R(t - \tau) d\tau dt, \quad (14)$$

which for cases of constant concentration in air reduces to

$$D(T) = K \times C \times V \times \int_0^T \int_0^t R(t - \tau) d\tau dt. \quad (15)$$

Again, all terms may be subscripted by chemical, phase, and lung region. The units of dose are gram-days in the lung region of interest. When K is unknown (as is true for ETS), it is ignored and the dose is replaced by the integral of the organ burden, IB.

Retention functions can take on a variety of forms that depend upon the physical processes involved in removal from an organ. These functions, however, usually are approximated by an exponential function or a sum of such functions

$$R(t) = e^{-\lambda t}, \quad (16)$$

where λ is the removal rate constant (unit of time^{-1}) from the organ or region of interest. Substitution of this retention function into either of Equations 9 through 11 for constant concentration C gives

2029047729

Source: https://www.industrydocuments.ucsf.edu/docs/lydl0000

$$D(T) = C \times V \times f\int_0^T e^{-\lambda t}dt = \frac{C \times V \times f \times (1-e^{-\lambda T})}{\lambda} \quad (17)$$

ignoring the subscripts for lung region. The dose may be obtained by substituting Equation 17 into Equation 12, and then inserting Equation 12 into Equation 13:

$$D(T) = \int_0^T \frac{K \times C \times V \times f \times (1 - e^{-\lambda t})}{\lambda} dt = \frac{K \times C \times V \times f \times (T - (1 - e^{-\lambda T})/\lambda)}{\lambda} \quad (18)$$

As before, the integral organ burden over T is obtained by ignoring K in Equation 18.

An additional complication arises in distinguishing between an organ burden (or dose) and a biologically active organ burden. For some chemicals, e.g., nicotine, biotransformation may occur in the body (see, e.g., Jacob et al., 1988; Hoffmann and Hecht, 1989; Hoffmann et al., 1987; Hoffmann and Wynder, 1986). The chemical form of a substance may be altered, producing a new molecule (such as cotinine) of either greater or lesser potential for harm. In that case, the burden (or dose) of interest would be the one from the active form of the chemical. This form may or may not be the form present in the environment. The biologically active burden B_B, will be equal to the burden of inhaled material, B, times a scaling factor, k_A, for activation of that material. When the rate constant for activation is small compared to the rate constant for elimination of the active form, it may be necessary to perform specific calculations of B_B. In general, k_A will be the fraction of the inhaled chemical biotransformed into the active form. Similarly, D_B will equal the *biologically active dose* and is obtained by multiplying D by k_A (or by calculating D_B directly). For most chemicals (particularly those in ETS), k_A is unknown and B_B or D_B must be approximated by B or D as described earlier. An exception is the conversion of nicotine to cotinine.

2029004730

Source: https://www.industrydocuments.ucsf.edu/docs/lydl0000

C.2.2. Translocation to Systemic Organs

As shown in Figure C-2, the lung is coupled to the other organs of the body through the bloodstream and the GI tract. Material deposited in the P region of the lung tends to be translocated into the bloodstream, where it is carried to the systemic organs or excreted, primarily in the urine. This process may be viewed as essentially catenary (Crawford-Brown, 1984), in which a chemical moves from the lung, into the blood, into an organ, and then into the urine. Flow is assumed to be unidirectional, avoiding the complications introduced by recirculation and exchange between organs.

Material deposited in the NP region is removed primarily to the G.I. tract, with little absorption of ETS chemicals directly into the bloodstream (Wald et al., 1981). For deposition in the TB region, there is evidence of high absorption of nicotine into the blood, at least in dogs (Herrmann et al., 1989). From the G.I. tract, the chemicals are absorbed to a limited degree into the bloodstream, where they are expected to behave in a manner similar to the material entering the blood from the P region. Slight differences can occur due to the proximity of the liver to the G.I. tract, but there is not sufficient information available to consider that further. Chemicals unabsorbed by the GI tract will be excreted in the feces.

Let $f_{P,b}$ equal the fraction of a chemical leaving the P region and entering the blood. This fraction is determined with respect to the uptake and not the intake. Similarly, let $f_{TB,b}$ and $f_{NP,b}$ be the fraction leaving the TB and NP regions, respectively, and entering the blood. The latter fraction will be quite small and is ignored here. The fractions $f_{TB,GI}$ and $f_{NP,GI}$ represent the fraction of regional uptake entering the G.I. tract. The latter fraction is assumed to equal unity here. The term $f_{GI,b}$ equals the fraction of a chemical in the G.I. tract which crosses into the bloodstream. The total uptake of a chemical entering the bloodstream is

$$U^b = U^P f_{P,b} + U^{TB} f_{TB,b} + (U^{TB}(1-f_{TB,b}) + U^{NP} f_{NP,GI}) f_{GI,b} \qquad (19)$$

2029047731

Source: https://www.industrydocuments.ucsf.edu/docs/lydl0000

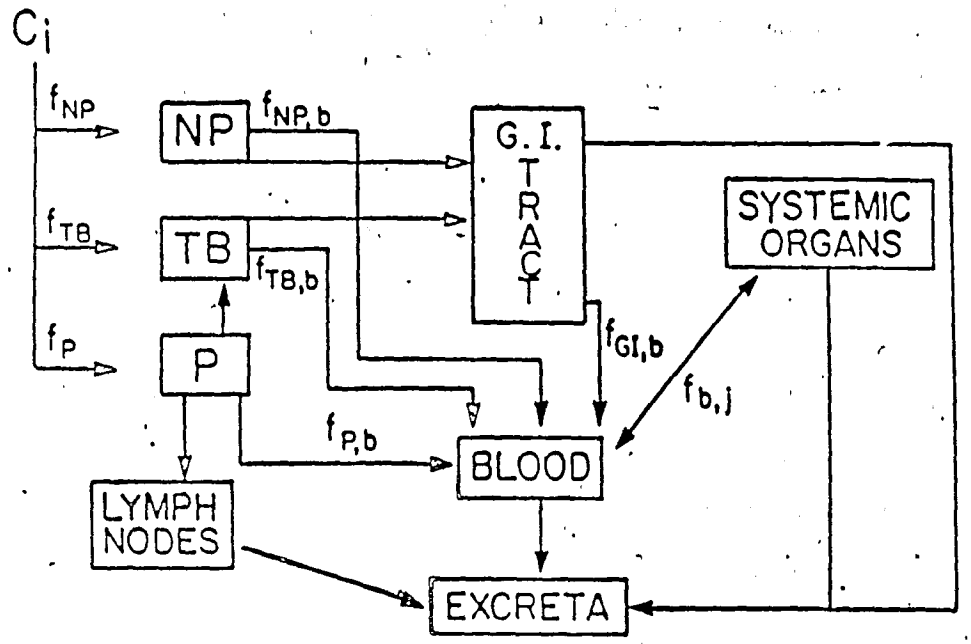

FIGURE C-2. A COMPARTMENTAL MODEL OF THE HUMAN BODY, DISPLAYING ORGANS, TISSUES, FLUIDS, AND THEIR INTERCONNECTIONS

2029047732

Source: https://www.industrydocuments.ucsf.edu/docs/lydl0000

The expressions for U^P, U^{TB} and U^{NP} may be found in Equations 5 through 7.

Material in the blood is cleared into the systemic organs. The fraction of material moving from the blood into a specific organ, indexed by j, will be denoted by f_{bj}. Its value is assumed to be independent of the route into the blood, although this assumption is untested at present. The uptake into organ j is described by

$$U^j = U^b \times f_{bj} \tag{20}$$

where U^b is given by Equation 19.

The retention function for a substance in organ j is given by $R_j(t)$. The dose to an organ following an acute uptake to the organ then is

$$D^j = K \times U^j \times \int_0^T R_j(t)dt. \tag{21}$$

This dose may be converted to a biologically active dose by multiplying Equation 21 by k_A (unknown at present). Since K also is unknown, D must be replaced by the integral organ burden.

For protracted exposure to a chemical at a constant concentration, C in air, uptake to organ j in the time interval [0,T] is

$$D^j(T) = K \times C \times V \times [f_P f_{Pb} + f_{TB} f_{TBb} + f_{NP} f_{NP,G} f_{GIb}] f_{bj} \times \int_0^T \int_0^t R_j(t - \tau)d\tau dt. \tag{22}$$

Implicit in the equation is the assumption that material clears rapidly from the lung and into organ j, at least with respect to the interval of exposure. If it is assumed that the NP region does not contribute significantly to systemic doses, due to low values of f_{GIb} Equation 22 reduces to:

$$D^j(T) = K \times C \times V \times [f_P f_{Pb} + f_{TB} f_{TBb}] \times f_{bj} \times \int_0^T \int_0^t R_j(t - \tau)d\tau dt. \tag{23}$$

2029047733

Source: https://www.industrydocuments.ucsf.edu/docs/lydl0000

If it is assumed further that $R_j(t)$ is a single exponential function with rate constant, λ, then:

$$D^j(T) = K \times C \times V \times [f_P f_{P,b} + f_{TB} f_{TB,b}] \times f_{b,j} \times (T - (1-e^{-\lambda T})/\lambda)/\lambda. \qquad (24)$$

Unfortunately, organ specific values for $f_{b,j}$ are not known for the chemicals in ETS. There are, however, limited data concerning the distribution of nicotine, a component of ETS, within various tissues. The steady-state distributions of nicotine in those organs will be approximately proportional to the dose-rate and, hence, the dose. The measurements, taken from a report by the U.S. Surgeon General (U.S. DHHS, 1988) are displayed in Table C-1. It will be noted that nicotine accumulates primarily in the kidney, followed by the liver, heart, brain, muscle and adipose tissue. If the dose to the blood is calculated for nicotine, therefore, the dose to other organs or tissues may be obtained by multiplying by the ratios in Table C-1. It is unlikely, however, that the same ratios will apply to other chemicals in ETS.

C.2.3. Summary

A measure of exposure to a given *chemical* in ETS could take several forms:

1) Exposure Intensity, C, in units of g/m^3.
2) Cumulative Exposure, ϕ, in units of g-days/m^3 (see Equations 1 and 2).
3) Lung Intake, I, in units of grams of chemical (see Equation 3).
4) Total Lung Uptake, U, or Uptake to the P region, U^P, TB region, U^{TB}, or NP region, U^{NP}, in units of grams of chemical (see Equations 4-7).
5) Total Lung Burden, B, or Burden in the P region, B^P, TB region, B^{TB}, or NP region, B^{NP}, in units of grams of chemical (see Equations 8-11).
6) Integral Organ Burden, IB, in units of gram-days of chemical.
7) Total Lung Dose, D, or Dose to the P region, D^P, TB region, D^{TB}, or NP region, D^{NP}, in units of gram-days of chemical. [illegible]

2029047734

Source: https://www.industrydocuments.ucsf.edu/docs/lydl0000

05 NOV 90

TABLE C-1. STEADY-STATE RATIO OF CONCENTRATIONS OF NICOTINE IN BODY TISSUES OR ORGANS

Tissue	Ratio*
Blood	1.0
Brain	3.0
Heart	3.7
Muscle	2.0
Adipose	0.5
Kidneys	21.6
Liver	3.7
Lung	2.0
Gastrointestinal	3.5

*Relative to blood.

Source: U.S. Surgeon General (1986).

2029047735

Source: https://www.industrydocuments.ucsf.edu/docs/lydl0000

05 NOV 90

obtained from Intake or Uptake (above) or:

8) Blood Uptake, U^b, in units of grams of chemical (see Equation 19).

9) Organ Uptake, U^j, in units of grams (see Equation 20).

10) Integral Organ Burden, IB^j, in units of gram-days of chemical (see Equations 21-24 divided by K).

11) Organ Dose, D^j, in unit of gram-days of the chemical in the organ (see Equations 21-24). This generally will not be possible to calculate.

12) Biologically Active Organ Dose, D^j_b, in units of gram-days of the biologically active form. This generally will not be possible to calculate.

The measure of exposure to a chemical depends upon the level of available information. In cases where parameter values are unknown, it will not be possible to calculate values that depend upon those parameters. In such cases, the measure further "upstream" in the chain of calculations must be used. For example, the retention functions for many of the chemicals in ETS are not available at present. For these chemicals, uptake is the most highly developed measure of dose possible. For vapor phase chemicals, the deposition fractions or equilibrium concentration ratios (tissue:air) have not been measured to date, leaving intake as the best available measure of exposure.

C.3. ASSUMED EXPOSURE CONDITIONS AND INTAKES

Exposure to ETS may vary widely due to differences in cigarette type, rate of smoking, ventilation conditions, room volume, etc. No attempt is made here to develop calculations under the immense range of conditions likely to be found in society. Instead, calculations are presented for a simplified case that is typical of exposure conditions. The exposure duration, T, for both active and passive smokers is taken to be one day, with exposure to ETS at a constant concentration, C (see the equations in Section 2 of this report). Of interest is the dose

2029047736

Source: https://www.industrydocuments.ucsf.edu/docs/lydl0000

05 NOV 90

delivered to tissues as a result of this single day of exposure. Predictions at any other concentration, C*, and any other exposure length, T*, may be obtained by multiplying the reported value by:

$$\frac{C^*}{C} \cdot \frac{T^*}{T}$$

For this example it is assumed that an active smoker smokes one pack (20 cigarettes) in a structure of volume 150 m^3 over a one day period with a passive smoker present. The NRC (1986) reports an average of 26 mg of respirable suspended particulate (RSP) matter per cigarette in the sidestream smoke (SS), giving an emission rate of 22 mg/hour. With an air exchange rate of 1 per hour, an approximate U.S. average, in a room volume of 150 m^3, the concentration of RSP in the air will be approximately 200 $\mu g/m^3$ (see Figures 5-4 and 5-6 in NRC, 1986). Assuming a tidal volume of 750 mL and a breathing frequency of 15 per minute (Crawford-Brown, 1987), the total daily intake of RSP for the passive smoker will be approximately 3 mg.

Rickert et al. (1984) measured the RSP in mainstream smoke (MS) and found a range of 0.7 to 17 mg per cigarette, for cigarettes primarily low in tar. By contrast, the NRC (1986) report 15 to 40 mg for non-filter cigarettes. A moderate value of 12 mg will be assumed here. The daily intake of RSP for an active smoker of 20 cig./day will be 240 mg. The values of 240 mg in the active smoker and 3 mg in the passive smoker correspond to values assumed by Wells (1988).

The distributions of chemicals by mass in the MS from one nonfilter cigarette are displayed in Table C-2 by vapor and particulate phase (NRC, 1986). In this table, a representative value from the NRC report (1986) is reported. Also shown in the table are the ratios of the amount of each chemical leaving the cigarette in diluted SS and in MS. The total

2029047737

Source: https://www.industrydocuments.ucsf.edu/docs/lydl0000

05 NOV 90

TABLE C-2. APPROXIMATE COMPOSITION OF MAINSTREAM (MS) AND DILUTED SIDESTREAM SMOKE (SS) FROM ONE NON-FILTER CIGARETTE*

Constituent	Average MS	Average SS/MS
Vapor Phase in MS		
Carbon monoxide	15 mg	3
Carbon dioxide	30 mg	10
Carbonyl sulfide	30 µg	0.1
Benzene	30 µg	8
Toluene	150 µg	7
Formaldehyde	85 µg	20
Acrolein	80 µg	12
Acetone	175 µg	3
Pyridine	30 µg	13
3-Methylpyridine	25 µg	13
3-Vinylpyridine	20 µg	10
Hydrogen cyanide	450 µg	30
Hydrazine	30 µg	3
Ammonia	90 µg	110
Methylamine	20 µg	5
Dimethylamine	9 µg	4
Nitrogen oxides	400 µg	7
N-nitrosodimethylamine	30 ng	60
N-nitrosodiethylamine	20 ng	30
N-nitrosopyrrolidine	20 ng	18
Formic acid	350 µg	1.5
Acetic acid	500 µg	3
Methyl chloride	350 µg	2.5
Particulate Phase in MS		
RSP	24 mg	1.5
Nicotine	14 mg	3
Anatabine	10 µg	0.3
Phenol	100 µg	2.5
Catechol	200 µg	0.7
Hydroquinone	200 µg	0.8
Aniline	360 ng	30
2-Toluidine	160 ng	19
2-Naphthylamine	2 ng	30
4-Aminobiphenyl	5 ng	31
Benz(a)anthracene	50 ng	3

(continued on following page)

2029004738

Source: https://www.industrydocuments.ucsf.edu/docs/lydl0000

The calculations in Table C-3 presume fresh diluted SS, which ages over time. This aging may change the physicochemical properties of the ETS due to plating, ventilation, metabolism, etc. (NRC, 1986). Little is known, however, about the effect of aging. For reference, the average concentration of several airborne components of ETS measured under diverse environmental conditions are shown in Table C-4 (adapted from Repace, 1987).

Since the results in Table C-4 were obtained under such a wide range of conditions, absolute concentrations of chemicals in aged air are difficult to specify for the environmental conditions assumed in this report. Still, a limited comparison of relative values can be made by focusing on nicotine, benzene, N-nitrosodimethylamine and N-nitrosodiethylamine, since these measuresurements were made under roughly similar conditions in a room with a large number of smokers (Badre et al., 1978; Brunnemann et al., 1978; Stehlik et al., 1982). From these measurements, the relative concentrations of nicotine: benzene: N-nitrosodimethylamine: N-nitrosodimethylamine are 1:0.2:0.0002:0.0001. These values may be compared against the predictions using fresh diluted SS in Table C-3, which suggest values of 1:0.06:0.00004:0.0001. The relative concentrations of these four chemicals, therefore, do not appear to have been significantly affected by aging, with the possible exception of benzene. The reason for the increase in benzene after aging is unknown. The benzene estimate is based on a single small sample, which may be a factor. Subsequent calculations will use the concentrations and intake values in Table C-3 based on fresh diluted SS. There is need for more research on the effects of aging for ETS.

2025047239 A

Source: https://www.industrydocuments.ucsf.edu/docs/lydl0000

TABLE C-2. (continued)

Constituent	Average MS	Average SS/MS
Benzo(a)pyrene	30 ng	3
Cholesterol	20 μg	0.9
λ-Butyrolactone	15 μg	4
Quinoline	1 μg	10
Harman	2 μg	1
N-nitrosonornicotine	1500 ng	2
NNK	500 ng	3
N-nitrosodiethanolamine	50 ng	1
Cadmium	100 ng	7
Nickel	50 ng	20
Zinc	60 ng	7
Polonium-210	0.1 pC_i	3
Benzoic acid	20 μg	0.8
Lactic acid	100 μg	0.6
Glycolic acid	100 μg	0.8
Succinic acid	120 μg	0.5

*Adapted from Table 2-2 of NRC (1986).

RSP inhaled in one day by the passive smoker in our example is proportional to its concentration in air of 200 $\mu g/m^3$. As noted above, using that value and Table C-2, the concentration of other chemicals inhaled from SS can be obtained from the relation

$$C_i = 200 \times \left[\frac{M_i}{M_{RSP}}\right] \times \left[\frac{R_i}{R_{RSP}}\right] \qquad (25)$$

where C_i is the concentration of chemical i in the room air ($\mu g/m^3$), M_i is the average mass of chemical i in MS and M_{RSP} is the mass of RSP in MS (both taken from Table C-2), R_i is the ratio SS/MS for chemical i from Table C-2 and R_{RSP} is the ratio SS/MS for RSP. Computed values of C_i and the intakes for the passive smoker and the active smoker are shown in Table C-3 for known carcinogens in tobacco smoke.

2029047239

Source: https://www.industrydocuments.ucsf.edu/docs/lydl0000

TABLE C-3. SUMMARY OF CONCENTRATIONS AND DAILY INTAKES FOR CONSTITUENTS OF CIGARETTE SMOKE, ASSUMING FRESH SS

Constituent*	C$_i$**	I$_i$†	I$_i$††
Benzene	1.3 µg/m³	21 µg	300 µg
Hydrazine	0.5 ng/m³	8 ng	300 ng
N-nitrosodimethylamine	30.0 ng/m³	160 ng	300 ng
N-nitrosodiethylamine	3.0 ng/m³	48 ng	200 ng
N-nitrosopyrrolidine	2.0 ng/m³	32 ng	200 ng
RSP[a]	200.0 µg/m³	3 mg	240 mg
Nicotine[b]	23.0 µg/m³	370 µg	14 mg
2-Naphthylamine[a]	0.3 ng/m³	5 ng	20 ng
4-Aminobiphenyl[a]	0.9 ng/m³	14 ng	50 ng
Benz(a)anthracene[a]	0.8 ng/m³	13 ng	500 ng
Benzo(a)pyrene[a]	0.5 ng/m³	8 ng	300 ng
λ-Butyrolactone[a]	0.3 µg/m³	5 ng	150 µg
N-nitrosonornicotine[a]	17.0 ng/m³	270 ng	15 µg
N-nitrosodiethanolamine[a]	0.3 ng/m³	5 ng	500 ng
Nickel[a]	6.0 ng/m³	96 ng	500 ng
Polonium-210[a]	2.0 nC$_i$/m³	32 nC$_i$	1 pC$_i$

* Only constituents listed as human carcinogens, suspected human carcinogens or animal carcinogens (NRC, 1986) are listed, with the exception of nicotine (a precursor to carcinogens).

** For passive exposures only.

† Intake for passive exposure.

†† Intake for active exposure.

[a] Chemicals located in the particulate phase for both active and passive smokers.

[b] Nicotine is assumed to be entirely in the particulate phase for active smokers and entirely in the vapor phase for passive smokers.

2029047740

Source: https://www.industrydocuments.ucsf.edu/docs/lydl0000

4 05 NOV 90

TABLE C-4. MEASUREMENTS OF ETS CONSTITUENTS IN ENVIRONMENTAL SETTINGS*

Constituent	Setting	Average concentration	Reference
Acrolein	Varied	0.1 mg/m³	Badré et al., 1978
	Varied	8.0 ppb	Fischer et al., 1978, and Weber et al., 1979
Benzene	Varied	0.1 mg/m³	Badré et al., 1978
Toluene	Varied	1.0 mg/m³	Badré et al., 1978
Benzo(a)pyrene	Arena	10.0 ng/m³	Elliot and Rowe, 1975
	Restaurant	6.0 ng/m³	Galuskinova, 1964
	Coffeehouses	5.0 ng/m³	Just et al., 1972
	Restaurant	10.0 ng/m³	Husgafvel-Pursiainen et al., 1986
	Public places	100.0 ng/m³	Perry, 1973
Carbon monoxide	Varied	20.0 ppm	Badré et al., 1978
	Varied	8.0 ppm	Chappell and Parker, 1977
	Rooms varied	5.0 ppm	Coburn et al., 1965
	Taverns	12.0 ppm	Cuddleback et al., 1976
	Planes	3.0 ppm	USDOT, 1971
	Arenas	15.0 ppm	Elliott and Rowe, 1975
	Restaurant	3.0 ppm	Weber et al., 1979
	Restaurant	5.0 ppm	Fischer et al., 1978
	Varied	10.0 ppm	Godin et al., 1972

(continued on following page)

2029047741

Source: https://www.industrydocuments.ucsf.edu/docs/lydl0000

05 NOV 90

TABLE C-4. (continued)

Constituent	Setting	Average concentration	Reference
	Office	5.0 ppm	Harke, 1974
	Car	40.0 ppm (peak)	Harke and Peters, 1974
	Train	20.0 ppm	Harmsen & Effenberger, 1957
	Public places	8.0 ppm	Perry, 1973
	Rooms	15.0 ppm	Portheine, 1971
	Varied	10.0 ppm	Stebben et al., 1977
	Conference rooms	8.0 ppm (peak)	Slavin and Hertz, 1975
	Offices	3.0 ppm	Szadkowski et al., 1976
Nicotine	Varied	100.0 $\mu g/m^3$	Badré et al., 1978
	Submarines	30.0 $\mu g/m^3$	Cano et al., 1970
	Train	2.0 $\mu g/m^3$	Harmsen & Effenberger, 1957
	Varied	6.0 $\mu g/m^3$	Hinds & First, 1975
	Restaurants	15.0 $\mu g/m^3$	Muramastu et al., 1984
N-nitrosodi-methylamine	Varied	100.0 ng/m^3	Brunnemann & Hoffmann, 1978, and Brunnemann et al., 1978
	Restaurants	25.0 ng/m^3	Stehlik et al., 1982

(continued on following page)

2029047742

Source: https://www.industrydocuments.ucsf.edu/docs/lydl0000

TABLE C-4. (continued)

Constituent	Setting	Average concentration	Reference
RSP	Varied	200.0 $\mu g/m^3$	Repace and Lowrey, 1980
	Varied	300.0 $\mu g/m^3$	Repace and Lowrey, 1982
	Coffeehouses	1000.0 $\mu g/m^3$	Just et al., 1972
	Hospital	30.0 $\mu g/m^3$	Neal et al., 1978
	Residences	60.0 $\mu g/m^3$	Spengler et al., 1981
	Offices	130.0 $\mu g/m^3$	Weber and Fischer, 1980
	Offices	50.0 $\mu g/m^3$	Nelson et al., 1982
	Restaurants	1000 0 $\mu g/m^3$	Husgafvel-Pursiainen et al., 1986
	Houses	150.0 $\mu g/m^3$	Brunekreef and Beleij, 1982
	Tavern	600 0 $\mu g/m^3$	Cuddleback et al., 1976
	Residences	30 0 $\mu g/m^3$	Dockery and Spengler, 1981
	Arenas	400.0 $\mu g/m^3$	Elliott and Rowe, 1975
Acetone	Varied	1.0 mg/m^3	Badré et al., 1978
Sulfates	Residences	5.0 $\mu g/m^3$	Dockery and Spengler, 1981

*Adapted from Repace (1987).

2029077773

Source: https://www.industrydocuments.ucsf.edu/docs/lydl0000

Application of the dosimetry model of ETS beyond the initial step of predicting inhalation becomes hampered by the large amount of detailed biological information required for the carcinogens in tobacco smoke. This limitation is more applicable to the vapor phase, however, than to the particulate phase. In the latter case, many of the dosimetric characteristics are largely dependent on the distribution of the size and density of particulates rather than chemical-specific properties. To continue illustration of our example as possible, and also to identify where information is available and where it is needed, we will consider the particulate phase further but not the vapor phase. The information available for calculation by lung regions is disparate, so assumptions will be made explicit as required to complete calculations for lung dose from the particulate phase for our example. We have stopped short of introducing assumptions that do not seem "reasonable," however, simply for the sake of illustration. The calculated values may be viewed as approximations, vis-a-vis the assumptions used. In any event, intake of vapor phase components is included in Table C-3.

Fortunately, one of the major constituents of interest in tobacco smoke, nicotine, has been sufficiently studied that much of the information required for prediction of lung and systemic organ dose of nicotine and the metabolite cotinine can be calculated for our example, including both the vapor and particulate phases for active and passive smoking. Nicotine dosimetry is particularly relevant because it is the addictive factor in active smoking and is a pre-cursor of tobacco specific nitrosamines, at least one of which (NNK) is a potent carcinogen (Hoffmann and Hecht, 1989). Also, nicotine forms the tobacco-specific metabolite cotinine, widely considered to be the preferred biomarker for ETS exposure. Calculations for nicotine/cotinine are in Section C.6.

2029047744

Source: https://www.industrydocuments.ucsf.edu/docs/lydl0000

C.4. UPTAKE OF PARTICULATE PHASE CHEMICALS.

Due to lack of data on uptake of vapor phase components by lung tissue, only the uptake of particulate phase chemicals can be considered here. For chemicals in the vapor phase, the proportionality constant to convert from intake to uptake may differ between chemicals. The lack of chemical-specific data on uptake from the vapor phase is a major limitation for comparison of carcinogenicity of tobacco smoke to active and passive smokers. There is a pressing need for research on concentration ratios (air:tissue) for vapor phase components of ETS.

In calculating uptake of particulate phase chemicals, it is necessary to specify regional deposition fractions (Equations 5 through 7). A primary environmental determinant of these fractions is particle diameter. The mean diameter for MS has been reported to range from 0.1μ to 1μ (Carter and Hasegawa, 1975; Hiller et al., 1982), and from 0.01μ to 0.8μ for SS. For the calculations reported here, a Mass Median Aerodynamic Diameter or MMAD of 0.7μ is used for MS (Stober, 1984) and a MMAD of 0.4μ is assumed for fresh diluted SS (Wells, 1988). The particle diameters are assumed to be distributed lognormally with a geometric standard deviation (GSD) of 1.5 (Stöber, 1984).

Aged air, however, may contain a different distribution of aerosol sizes. Several authors (Keith and Derrick, 1960; Wynder and Hoffman, 1967; Ingebrethsen and Sears, 1985) have demonstrated that the MMAD for cigarette smoke decreases by a factor of 2 to 3 due to aging. This appears to be due to the loss of large particles from the suspended aerosol, as may be seen in the measured and predicted distributions published by Nazaroff and Cass (1989). An additional factor may be the "boiling off" of chemicals from the RSP. The present report, therefore, assumes that the MMAD for aged ETS is on the order of 0.15μ, and that for direct smoking is 0.7μ.

2029047745

Source: https://www.industrydocuments.ucsf.edu/docs/lydl0000

Total deposition of smoke in the lung has been reviewed by Stöber (1984), based primarily on studies by Hiller et al. (1982), Mitchell (1962), and Polydorova (1961). These results suggest that as much as 80% of the MS particulates are deposited in the lung (i.e., $f_{NP} + f_{TB} + f_P = 0.8$), while 10% to 20% of the ETS particulates are deposited. The value for ETS is consistent with the predictions of total lung deposition from an age-dependent model by Crawford (1982, 1983), which yields values of 1%, 4%, and 10% for f_{NP}, f_{TB}, and f_P, respectively, for a MMAD of 0.15μ.

The very high value of total deposition in active smokers appears to arise from several factors. The first is hygroscopic growth, which may be expected to double the size of particulate MS from 0.7μ to 1.4μ (Ishizu et al., 1980). The second factor is breath-holding, in which cigarette smoke is held in the lungs for several seconds prior to exhalation. If the model of Crawford (1982, 1983) is used with a breath-holding period of 3 seconds, particle diameters of 1.4μ are predicted to yield values of 1%, 15%, and 60% for f_{NP}, f_{TB}, and f_P, respectively. Since these sum to approximately the 80 percent reported in experiments, these values will be assumed here. Hygroscopic growth of ETS particles will not be assumed, since the inhaled and exhaled particles appear to be of the same diameter (Hiller et al., 1982).

As described previously, the total intake of RSP is assumed to be 240 mg in an active smoker and 3 mg in a passive smoker in our example. Using these values in conjunction with the estimates of f_{NP}, f_{TB}, and f_P from Equations 5 through 7, the calculated daily uptakes in mg by lung region are 12 mg, 36 mg and 144 mg for the NP, TB and P regions of the active smoker; 0.03 mg, 0.12 mg and 0.3 mg for the NP, TB and P regions of the passive smoker.

C.5. INTEGRAL ORGAN BURDENS FOR THE LUNG

C.5.1. Integral Organ Burden from RSP

Due to the very low assumed deposition fractions in the NP region, the focus of this discussion will be on the TB and P regions.

2029047746

Source: https://www.industrydocuments.ucsf.edu/docs/lydl0000

Translocation of the particles is on the mucus layer, which is driven forward towards the esophagus by the cilia. The velocity of this mucus blanket decreases dramatically in the deeper sections of the TB region. As a result, the length of time a particle resides in the lung depends critically on the site of deposition. Data on the removal of radiolabeled particles, however, show that removal from the TB region generally may be characterized by two phases. The first is a rapidly cleared phase, dominated by particles deposited on the mucus of the upper passageways. The second is dominated by particles deposited on the slowly moving mucus of distal passageways. Both phases are controlled primarily by the movement of the mucus and the site of deposition of the particles rather than on the chemical nature of the particles. It is possible, therefore, to use the results of the radiolabeled aerosol studies to estimate the retention of particulate ETS in the TB region.

Crawford and Eckerman (1983) have used the deposition model of Crawford (1982) and a model of mucus movement; in conjunction with measurements of retention of radiolabeled aerosol particles in healthy (non-smoking) human lungs, to develop predictive equations of retention. These retention functions contain two exponentials, corresponding to the two removal phases described above. The parameters in these equations depend upon the aerosol diameter and breathing characteristics. The general form of the equation is:

$$R(t) = (1 - b)e^{-0.693t/C_1} + b\,e^{-0.693t/C_2}$$

where t is the time since uptake into the TB region (in minutes). The parameter b is a function of median aerosol diameter, age, the GSD of the particle distribution and breathing characteristics. This parameter value equals the fraction of deposited particles found in the slowly removed component. The parameters C_1 and C_2 are the removal half-times for the rapid and slow components, respectively.

2029047747

Source: https://www.industrydocuments.ucsf.edu/docs/lydl0000

05 NOV 90

As described earlier, the MMAD for ETS particles is 0.15μ, with a GSD of 1.5. Applying the results of Crawford and Eckerman (1983) to ETS, yields values for b, C_1, and C_2 of 0.98, 450, and 710 minutes, respectively. For a MMAD of 1.4μ and a GSD of 1.5, the values of b, C_1, and C_2 are 0.82, 280, and 700 minutes, respectively. The flow of mucus in the TB region of active smokers, however, is reduced by a factor of 2 (Albert et al., 1975; Wanner et al., 1973). If the parameter values for 1.4μ in normal (non-smoking) lungs are changed to reflect the condition of slowed mucus, the half-times in the retention function would be doubled. For active smokers, therefore, C_1 and C_2 would be 560 minutes and 1400 minutes, respectively. The value of b should be unchanged.

The daily integral organ burden to the TB region from RSP may be obtained from Equation 15 by setting K equal to unity, f equal to f_{TB}, C × V equal to the daily intake of RSP, and T equal to 1440 minutes (24 hours). Using these values, the daily RSP integral organ burden to the TB region is 64,873 and 122 mg-minutes for the active and passive smokers in our example, respectively.

Solubilization and engulfment by macrophages generally dominate removal from the P region of the lung. Unfortunately, few data are available on the removal of RSP from the deep lung. It is known, however that the constituent chemical nicotine deposited in active smokers is highly soluble in lung fluid (Janoff et al., 1987). Black and Pritchard (1984) have found an alveolar retention half-time of 17 hours for RSP in active smokers, which will be used in our example. Similar measurements in passive smokers are not available. At this time, we use the same half-time for both passive and active smokers. Additional research is needed to accurately quantify removal of RSP in passive smokers. As a first approximation, a half-time of 17 hours for RSP removal will be assumed for both active and passive smokers (Wells, 1988). The retention function for the P region is

$$R(t) = e^{-0.693t/1020},$$

2029047748

Source: https://www.industrydocuments.ucsf.edu/docs/lydl0000

08 NOV 90

where t is in minutes since deposition. From Equation 15 for f_p and the daily intakes of RSP described earlier, the daily integral organ burden to the P region is 1.9×10^5 mg-minutes in active smokers and 390 mg-minutes in passive smokers.

C.5.2 Lung Integral Organ Burden from Particulate Chemicals

Chemicals should solubilize from the RSP at different rates, thereby affecting dose rate to the lung. Data to differentiate between chemical dose rates, however, are not available. The retention half-times used earlier will, therefore, be used here for other chemicals contained in particles. The ratio of integral organ burdens from chemical components, relative to RSP values, may be obtained from the ratio of intakes of those chemicals in the particulate phase shown in Table C-3. Daily integral organ burden to the lung by chemicals in the particulate phase have been calculated for the active and passive smoker of our example and are displayed in Table C-5.

C.6. CALCULATIONS FOR NICOTINE AND COTININE

The intake of nicotine by the active and passive smoker in the example described come from the particulate and vapor phases, respectively (Eudy, 1986). Leaderer (1988) gives the percentage of nicotine in the vapor phase of ETS as 95+, while Pritchard (1990) gives it as 70%.

2029004749

Source: https://www.industrydocuments.ucsf.edu/docs/lydl0000

TABLE C-5. DAILY INTEGRAL ORGAN BURDENS* FOR PARTICULATE PHASE CHEMICALS AS CALCULATED IN THIS REPORT
All Doses Are in mg-Minutes

Constituent	IB_P^{TB}	IB_P^P	IB_A^{TB}	IB_A^P
RSP	122	390	6.5×10^4	1.9×10^5
Nicotine	0	0	3.9×10^3	1.1×10^4
2-Naphthylamine	2×10^{-4}	6.2×10^{-3}	5.4×10^{-3}	0.016
4-Aminobiphenyl	5.6×10^{-4}	1.7×10^{-3}	1.4×10^{-2}	0.04
Benz(a)anthracene	5.2×10^{-4}	1.5×10^{-3}	0.14	0.4
Benzo(a)pyrene	3.2×10^{-4}	9.3×10^{-4}	0.08	0.24
λ-Butyrolactone	2×10^{-4}	5.8×10^{-4}	0.04	0.12
N-nitrosonornicotine	1.1×10^{-3}	3.1×10^{-3}	0.004	0.012
N-nitrosodiethanolamine	2×10^{-4}	5.8×10^{-4}	0.14	0.4
Nickel	3.8×10^{-3}	1.1×10^{-2}	0.14	0.4

* Superscript on IB indicates lung region (TB for tracheobronchial and P for pulmonary), and the subscript indicates passive (P) or active (A) smoker.

2029047750

Source: https://www.industrydocuments.ucsf.edu/docs/lydl0000

Our calculations, which presume that nicotine is entirely in the particulate phase for active smokers and entirely in the vapor phase for passive smokers, have been given in Table C-3. Nicotine concentrations have been measured in body fluids of active and passive smokers following known experimental exposure, providing information that can be applied to dosimetry calculations. Jarvis et al. (1984) have reported the results of nicotine measurements, which are summarized in Table 8-3 of the NRC report (1986). The nicotine/cotinine in the body fluids of passive smokers tends to be about 1% of the levels in active smokers.

As measured by Jarvis et al. (1988), Sepkovic et al. (1986), Kyerematen et al. (1982), and Benowitz et al. (1983), the clearance half-time for cotinine from the systemic body organs is on the order of 15 hours in active smokers. Sepkovic et al. (1986) suggest that this value for passive smokers is close to 45 hours. Their published data, however, indicate a half-time closer to 25 hours, a conclusion agreed upon by Jarvis et al. (1988). The half-time of 25 hours is more consistent with the measurements of urine excretion (Jarvis et al., 1988), where the half-time in passive smokers was 33 hours and in active smokers was 22 hours. This suggests that the passive-to-active ratio of half-times for removal of cotinine is about 1.5. For this ratio of excretion half-times, the data on body fluids (Jarvis et al., 1984) suggest that passive smokers take nicotine into their blood at a rate of 0.01/1.5 times the rate in active smokers, i.e., about 0.7% of the rate in active smokers. If it is assumed further that nicotine requires the same length of time to traverse the alveolar cells in passive and active smokers, a topic on which no data are available, then the ratio (active:passive) of integral organ burden for blood will equal approximately the ratio of rates into the bloodstream. This conclusion requires the assumption that the GI tract does not contribute significantly to the nicotine in the bloodstream. Data on nicotine absorption are not available at present. Since the nicotine dose to the P region is 11,000 mg-minutes for active smokers (see Table C-5), the integral organ burden to the lungs of passive smokers from vapor phase nicotine to this region will be approximately 80 mg-minutes

2029004751

Source: https://www.industrydocuments.ucsf.edu/docs/lydl0000

05 NOV 90

(or 11,400 × 0.007). For the TB region, the integral organ burden to the lungs will be 3900 × 0.007 or 27 mg-minutes. Neither the TB nor P region integral organ burdens are affected if the fraction of nicotine in the vapor phase is set equal to 70% instead of 100%. This invariance is due to the reliance on measured blood uptake for the calculation of integral organ burdens.

There is little available information on the uptake of chemicals to the bloodstream from which to calculate systemic organ doses. Again, nicotine/cotinine is an exception since measurements of body fluid concentrations and clearance half-times are available. As described above, nicotine is highly soluble in lung tissue, which implies that $f_{P,b}$ and $f_{TB,b}$ in Equation 19 are approximately 1. Thus, the uptake of nicotine to the bloodstream then equals the uptake into the P and TB regions of the lung. Once in the bloodstream, nicotine is converted to cotinine, as described by Jacob et al. (1988). This metabolic model is shown in Figure C-3, from which it may be seen that 70% of the nicotine is converted to cotinine, 9% goes directly to the urine, and 4% is metabolized to nicotine n-oxide. The remaining 17% is unaccounted for at present.

Nicotine is removed from the blood with a half-time of 2 hours in smokers (Jacob et al., 1988; Benowitz et al., 1982). As described above, the ratio of removal half-times for cotinine in passive and active smokers is 1.5. If this same ratio applies to the conversion of nicotine, passive smokers would display a removal half-time of 3 hours. If this ratio does not apply, both groups would possess a half-time of 2 hours. The retention function for nicotine then is either

$$R(t) = e^{-0.693t/2}$$

or

$$R(t) = e^{-0.693t/3},$$

depending on whether the removal half-time is 2 or 3 hours, respectively; t is in hours. Applying Equation 23, the daily integral organ burden from nicotine to the systemic organs of active

2029004752

Source: https://www.industrydocuments.ucsf.edu/docs/lydl0000

05- NOV 90

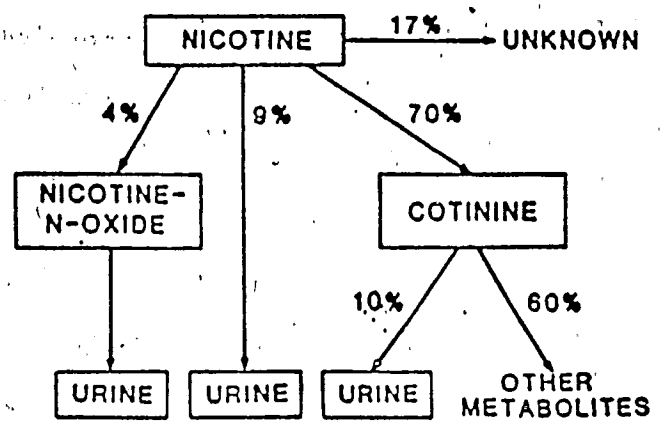

FIGURE C-3. A METABOLIC MODEL FOR THE CONVERSION OF NICOTINE AND THE EXCRETION

2029047753

Source: https://www.industrydocuments.ucsf.edu/docs/lydl0000

05 NOV 90

smokers is 2000 mg-minutes. The daily dose from nicotine to the systemic organs of passive smokers, using 0.7% of the value in active smokers, as discussed above, is approximately 16 mg-minutes if the half-time is 2 hours, and 27 mg-minutes if the half-time is 3 hours. Since the data of Kyerematen et al. (1982) and Lee et al. (1987) suggest that the rate of metabolism of nicotine is higher in active smokers, the latter value of 27 mg-minutes appears to be the best estimate.

The calculation of systemic organ doses from cotinine is more complicated than Equation 15, since cotinine is a metabolic product. The burden of nicotine in the blood at any time, t, after an uptake U_a is

$$B_a(t) = U_a e^{-0.693t/T},$$

where T is the removal half-time for nicotine (either 2 or 3 hours). The differential equation describing the rate of change of the burden of cotinine, $B_c(t)$, in blood then is:

$$\frac{dB_c(t)}{dt} = 0.693B_a(t)/T_c - 0.693B_c(t)/T_e \qquad (26)$$

where T_c is the conversion half-time from nicotine to cotinine and T_e is the elimination half-time for cotinine from the body (15 hours in smokers and 25 hours in passive smokers). The burden of cotinine is obtained by solving Equation 26 to yield

$$B_c(t) = \frac{\lambda_c U_a (e^{-\lambda t} - e^{-\lambda_e t})}{(\lambda_e - \lambda)} \qquad (27)$$

where

$$\lambda_c = 0.693/T_c$$
$$\lambda_e = 0.693/T_e$$
$$\lambda = 0.693/T$$

2029007754

Source: https://www.industrydocuments.ucsf.edu/docs/lydl0000

and U_s is 10.6 mg in the active smoker and 0.08 mg in the passive smoker. The dose from cotinine then is obtained from Equations 12 and 13. The value of T_c is equal to T/0.7, where 0.7 is the fraction of nicotine converted to cotinine. The daily integral organ burden to the systemic organs of the active smoker then is 7660 mg-minutes. The daily integral organ burden to the passive smoker is approximately 145 mg-minutes if T is three hours and 140 mg-minutes if T is two hours. The measures calculated for nicotine and cotinine, and their ratios in MS to ETS, are included in Table C-6 and C-7.

2029047755

Source: https://www.industrydocuments.ucsf.edu/docs/lydl0000

05 NOV 90

TABLE C-6. SUMMARY OF DOSE MEASURES CALCULATED IN THIS REPORT
(FOR OTHER PARTICULATE PHASE DOSES, SEE TABLE C-5)

Constituent	Measure	Value
1. Total RSP	Intake	P* = 3 mg A* = 240 mg
	Uptake	
	a. NP region	P = 0.03 mg A = 12 mg
	b. TB region	P = 0.12 mg A = 36 mg
	c. P region	P = 0.3 mg A = 144 mg
	Integral Organ Burden	
	a. NP region	P = na**
	b. TB region	P = 122 mg-min. A = 64,873 mg-min.
	c. P region	P = 390 mg-min. A = 1.9×10^5 mg-min.
2. Nicotine (particulate)	Intake	P = 0 mg A = 14 mg
	Uptake	
	a. NP region	P = 0 mg A = 0.72 mg
	b. TB region	P = 0 mg A = 2.2 mg
	c. P region	P = 0 mg A = 8.6 mg

(continued on following page)

2029047756

Source: https://www.industrydocuments.ucsf.edu/docs/lydl0000

05 NOV 90

TABLE C-6. (continued)

Constituent	Measure	Value
	Integral Organ Burden	
	a. NP region	P = 0 mg A = na
	b. TB region	P = 0 mg A = 3800 mg-min.
	c. P region	P = 0 mg A = 11,000 mg-min.
	d. Systemic organs	P = 0 A = 2000 mg-min.
3. Cotinine (particulate)	Integral Organ Burden to systemic organs	P = 0 A = 7600 mg-min.
4. Nicotine (vapor)	Intake	P = 0.37 mg A = 0 mg
	Uptake	
	a. NP region	P = na A = 0 mg
	b. TB region	P = na A = 0 mg
	c. P region	P = 0.06 mg A = 0 mg
	Integral Organ Burden	
	a. NP region	P = na A = 0 mg
	b. TB region	P = 27 mg-min. A = 0 mg-min.
	c. P region	P = 80 mg-min. A = 0 mg-min.

(continued on following page)

2029047757

Source: https://www.industrydocuments.ucsf.edu/docs/lydl0000

TABLE C-6. (continued)

Constituent	Measure	Value
	d. Systemic organs	
	i. Passive smoking Conversion $T_{\frac{1}{2}}$ = 2 hrs.	P = 16 mg-min. A = 0 mg-min.
	ii. Passive smoking Conversion $T_{\frac{1}{2}}$ = 3 hrs.	P = 27 mg-min. A = 0 mg-min.
5. Cotinine (vapor)	Integral Organ Burden to systemic organs	
	i. Passive smoking Conversion $T_{\frac{1}{2}}$ = 2 hrs.	P = 140 mg-min. A = 0 mg-min.
	ii. Passive smoking Conversion $T_{\frac{1}{2}}$ = 3 hrs.	P = 145 mg-min. A = 0 mg-min.
6. Nicotine (total)	Intake	P = 0.37 mg A = 14 mg
	Uptake	
	a. NP region	P = na A = 0.72 mg
	b. TB region	P = na A = 2.2 mg
	c. P region	P = 0.06 mg A = 8.6 mg
	Integral Organ Burden	
	a. NP region	P = na A = na
	b. TB region	P = 27 mg-min. A = 3800 mg-min.
	c. P region	P = 80 mg-min. A = 11,000 mg-min.

(continued on following page)

2029907758

Source: https://www.industrydocuments.ucsf.edu/docs/lydl0000

C R C FILE F747 F0051
ETS, EPA (1)

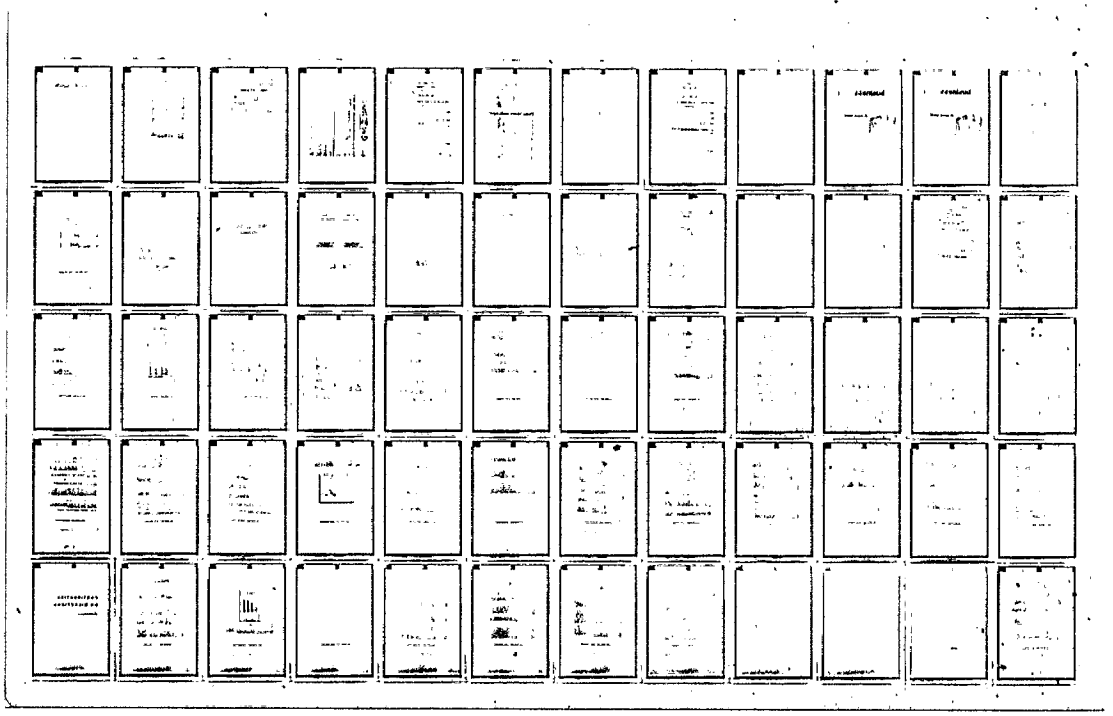

2029047759

Source: https://www.industrydocuments.ucsf.edu/docs/lydl0000

06 NOV 90

TABLE C-6. (continued)

Constituent	Measure	Value
	d. Systemic organs	
	i. Passive smoking Conversion $T_{\frac{1}{2}}$ = 2 hrs.	P = 16 mg-min A = 2000 mg-min.
	ii. Passive smoking Conversion $T_{\frac{1}{2}}$ = 3 hrs.	P = 27 mg-min. A = 2000 mg-min.
7. Cotinine (total)	Integral Organ Burden to systemic organs	
	i. Passive smoking Conversion $T_{\frac{1}{2}}$ = 2 hrs.	P = 140 mg-min. A = 7660 mg-min.
	ii. Passive smoking Conversion $T_{\frac{1}{2}}$ = 3 hrs.	P = 145 mg-min. A = 7660 mg-min.
8. Benzene	Intake	
	i. Using fresh SS	P = 21 μg A = 300 μg
	ii. Using aged SS	P = 65 μg*** A = 300 μg
9. Hydrazine	Intake	
	i. Using fresh SS	P = 8 ng A = 300 ng
	ii. Using aged SS	P = 8 ng*** A = 300 ng
10. N-nitroso-dimethylamine	Intake	
	i. Using fresh SS	P = 160 ng A = 300 ng
	ii. Using aged SS	P = 80 ng*** A = 300 ng

(continued on following page)

2029047760

Source: https://www.industrydocuments.ucsf.edu/docs/lydl0000

06 NOV 90

TABLE C-6. (continued)

Constituent	Measure	Value
11. N-nitroso-diethylamine	Intake	
	i. Using fresh SS	P = 48 ng A = 200 ng
	ii. Using aged SS	P = 48 ng*** A = 200 ng
12. N-nitroso-pyrrolidine	Intake	
	i. Using fresh SS	P = 32 ng A = 200 ng
	ii. Using aged SS	P = 32 ng*** A = 200 ng

* P = Passive, A = Active.

** na = not available for calculation due to insufficient information.

*** Obtained by multiplying the passive smoking intake for fresh SS by R, where R is the ratio of the concentration of the chemical relative to nicotine in aged SS to the concentration of the chemical relative to nicotine in fresh SS.

2029047261

Source: https://www.industrydocuments.ucsf.edu/docs/lydl0000

TABLE C-7. SUMMARY OF RATIO OF MEASURES (ETS/MS) CALCULATED IN THIS REPORT

Measure of Dose	Ratio
1. Intake of Total RSP	0.013
2. Uptake of Total RSP	
a. NP region	0.0025
b. TB region	0.003
c. P region	0.002
3. Integral Organ Burden of Total RSP	
a. NP region	na*
b. TB region	0.002
c. P region	0.002
4. Intake of Particulate Nicotine	0
5. Uptake of Particulate Nicotine	
a. NP region	0
b. TB region	0
c. P region	0
6. Integral Organ Burden of Particulate Nicotine	
a. NP region	0
b. TB region	0
c. P region	0
d. Systemic organs	0
7. Integral Organ Burden of Cotinine (from particulate nicotine)	
a. Systemic organs	0
8. Intake of Vapor Nicotine	Very large†
9. Uptake of Vapor Nicotine	Very large
10. Integral Organ Burden of Vapor Nicotine	
a. NP region	Very large
b. TB region	Very large
c. P region	Very large
d. Systemic organs	Very large

(continued on following page)

2029047762

Source: https://www.industrydocuments.ucsf.edu/docs/lydl0000

08 NOV 90

TABLE C-7. (continued)

Measure of Dose	Ratio
11. Integral Organ Burden of Cotinine (from vapor nicotine)	
a. Systemic organs	Very large
12. Total Intake of Nicotine	0.03
13. Total Integral Organ Burden of Nicotine	
a. NP region	na
b. TB region	0.01
c. P region	0.01
d. Systemic organs	
i. Passive smoking Conversion T_H = 2 hours	0.01
ii. Passive smoking Conversion T_H = 3 hours	0.015
14. Total Integral Organ Burden of Cotinine (Systemic organs)	
i. Passive smoking Conversion T_H = 2 hours	0.02
ii. Passive smoking Conversion T_H = 3 hours	0.02
15. Intake of Benzene	
a. Using fresh SS	0.07
b. Using aged SS	0.2
16. Intake of Hydrazine	
a. Using fresh SS	0.03
b. Using aged SS	0.03
17. Intake of N-nitrosodimethylamine	
a. Using fresh SS	0.5
b. Using aged SS	0.3
18. Intake of N-nitrosodiethylamine	
a. Using fresh SS	0.2
b. Using aged SS	0.2
19. Intake of N-nitrosopyrrolidine	
a. Using fresh SS	0.15
b. Using aged SS	0.15

*na = not applicable due to lack of data.
†Very large occurs when the value for active smokers is zero.

2029047763

Source: https://www.industrydocuments.ucsf.edu/docs/lydl0000

05 NOV 90

DRAFT--DO NOT QUOTE OR CITE

APPENDIX D

ALTERNATIVE APPROACHES FOR ESTIMATING THE YEARLY NUMBER OF LUNG CANCER DEATHS IN NON-SMOKERS DUE TO ETS BASED ON DOSE-RESPONSE MODELING

D.1. INTRODUCTION

In Chapter 4 the annual number of lung cancer deaths attributable to ETS was estimated from epidemiological case-control and cohort studies. This appendix investigates alternative methods based on dose-response modeling techniques.

In order to use dose-response modeling approaches to directly estimate the number of lung cancer deaths in nonsmokers attributable to ETS, three elements are required:

1. the distribution of the time-weighted exposure of ETS in the nonsmoking population,
2. the age distribution of the nonsmoking population, and
3. a mathematical dose-response model describing the relationship between the age-specific lung cancer rate and the independent variables age, sex, race, and ETS exposure.

The U.S. EPA has already collected sufficient information so that elements 1 and 2 can be approximated with reasonable accuracy in a straightforward manner. A discussion of potential methods for the derivation of the dose-response model, element (3), is the subject of this appendix.

Three independent approaches are identified for estimating the dose-response relationship between age-specific lung cancer death rates and ETS. Each of these methods has its advantages and disadvantages in estimating ETS cancer risk. Presently, none of them is developed in full detail. The purpose of presenting these preliminary approaches is to invite comment on their relative merit, solicit advice on other potential approaches that might be investigated, and to help prioritize further research efforts in this area. Much of the material

2029047764

Source: https://www.industrydocuments.ucsf.edu/docs/lydl0000

considered here is based on ongoing research that is not fully documented at this time, and it is presented as an illustration of the type of approach that could be taken.

The three proposed general approaches for deriving ETS dose-response models are:

1. Establish a dose-equivalent relationship between ETS and a positive control such as inhaled benzo[a]pyrene (B[a]P) which has an animal-based inhalation cancer dose-response model associated with it. Heavy use would be made of animal carcinogen test results in this approach. This approach will be subsequently referred to as the **Relative Potency Approach** (RPA).

2. Establish an equivalency relationship between the number of cigarettes smoked per day and ETS exposure levels in mg/m³ inhaled air. This relationship would then be used to estimate risk based on a direct state-of-the-art cigarette smoking dose-response model obtained from multiple sources of epidemiological data. This will be referred to as the **Cigarette-equivalent Approach** (CEA).

3. Use ETS epidemiological studies where a dose-dependent increase in the risk of nonsmoking women is associated with ETS. This will be referred to as the **Direct Approach** (DA).

Details concerning these approaches, examples of information that may be used in their conduct, and an evaluation of their strengths and weaknesses are presented in the following sections.

D.2. RELATIVE POTENCY APPROACH

D.2.1. Overview

The products of incomplete combustion from hydrocarbons (e.g., tobacco products) contain very complex mixtures of agents including thousands of polycyclic aromatic hydrocarbons (PAHs), many of which are known or suspected to be carcinogenic. The direct evidence for the carcinogenicity of hydrocarbon combustion products comes mainly from three types of information:

1. animal carcinogenicity tests of pure PAHs such as benzo[a]pyrene (B[a]P), etc., that are known to be formed as part of the combustion products of hydrocarbons,

2. animal carcinogenicity tests of condensates and various fractions of the condensates from hydrocarbon combustion products (e.g., coal flue gas, gasoline engine exhaust, diesel engine exhaust, coke oven emissions, etc.), and

2029094765

Source: https://www.industrydocuments.ucsf.edu/docs/lydl0000

3. human epidemiological studies (e.g., cigarette smoking, roofing tar fumes, coke oven emissions, etc.).

The EPA has historically used this type of information to help establish air quality criteria for emissions of complex mixtures of PAHs. In one situation a criterion for coke oven emissions was set based directly on epidemiological evidence of a dose-dependent increase in lung cancer (U.S. EPA, 1984). This evidence was gained from a long-term follow-up of black male workers who were working in close proximity to the coking operations in steel mills (Redmond et al., 1972). However, in most situations, direct evidence of the combined carcinogenic potency of the complex products of an emission source is not available. What often is available is information concerning the relative potency of complex PAH mixtures compared to a standard (such as B[a]P) obtained in experimental animal test systems (e.g., skin painting, lung implant, etc.). Data of this nature are not directly extrapolatable to humans due to our inability to establish equivalent exposure units for the experimental animal and anticipated human exposure routes. As a result, Albert et al. (1982) devised indirect methods for using relative potency information to estimate the risk due to inhalation of complex PAH mixtures. The general approach is to establish the relative potency of the complex PAH mixture compared to a standard agent that has a known inhalation dose-response model associated with it. Given the relative potency value, the exposure to the PAH mixture is converted into standard agent equivalent exposure units by taking the product of the PAH mixture exposure level and the relative potency. These standard equivalent exposure units are then substituted into the standard inhalation dose-response model to obtain cancer risk estimates that could be attributed to the complex PAH mixture. This general approach has been the guiding principal behind much of the PAH risk assessment research conducted by the EPA in recent years.

One view of ETS is that it is simply another complex mixture of agents containing multiple carcinogenic PAHs. Although ETS contains many carcinogens other than PAHs, recent research

2029047766

Source: https://www.industrydocuments.ucsf.edu/docs/lydl0000

(Grimmer et al., 1988) strongly suggests that the majority of ETS lung carcinogenic potency is due to the greater than 3-ring PAHs. This suggests that the same approaches for estimating lung cancer risk for complex PAH mixtures could also be employed to good advantage for estimating ETS lung cancer risk. Some of the information that could be useful in obtaining a cancer dose-response model for ETS using the general approach for PAHs is displayed in Table D-1.

D.2.2. Estimating ETS Relative Potency

The first step in obtaining an ETS dose-response model is to establish the relative carcinogenic potency of ETS compared to an appropriate standard (e.g., B[a]P, coke oven emissions, diesel engine exhaust). All of the available experimental information should be reviewed and evaluated for its quality and relevance in obtaining ETS relative potency estimates. One experiment that is a likely candidate for use in obtaining ETS versus B[a]P relative potency estimates is the lifetime rat lung implant study conducted by Grimmer et al. (1988). Due to its potential importance the protocol of that experiment is explained briefly. Three-month-old inbred Osborne-Mendel female rats were used. Various amounts of B[a]P or ETS fractions were dissolved in residue-free acetone, warmed to 50 degrees C, and a 1:1 mixture of beeswax and Trioctanoin was added. The acetone was removed by rotary evaporation under reduced pressure. This material was then warmed to 60 degrees C and introduced by injection into the left lobe of the lung of Nembutol-anesthetized animals following thoracotomy. Following its injection, the implant hardened into a pellet from which the test material diffused into the surrounding lung tissue. Following the test material injection, the thoracotomy aperture was sutured and the skin incision clipped. No further post-operative treatment was needed; operative and post-operative mortality was less than 5%. After surgery, rats were observed until

202907767

Source: https://www.industrydocuments.ucsf.edu/docs/lydl0000

08 NOV 90

TABLE D-1. SELECTED SOURCES OF INFORMATION POTENTIALLY USEFUL FOR DERIVING A DOSE-RESPONSE RELATIONSHIP FOR ETS

Agent	Route of exposure in animal experiments			Human risk models based on epidemiological data where exposure is inhalation
	Skin painting	Lung implants	Inhalation	
Benzo[a]Pyrene (B[a]P)	X	X	X	
3-Methylcholanthrene (MCA)	X	X		
Artificial Complex PAH Mixture			X	
Coal Flue Gas Condensate	X	X		
Gas Engine Condensate	X	X		
Diesel Engine Exhaust	X	X	X	Under development
Sidestream Cigarette Smoke (ETS)		X	X no tumors induced	Possible to develop
Mainstream Cigarette Smoke	X	X	X	State-of-the-art model required
Coke Oven Emissions	X			Model available U.S. EPA (1984)
Aluminum Smelter Emissions	X			Upper bound under development
Roofing Tar Fumes	X			Out of date
Indoor Coal	X			Under development
Wood Combustion	X			Under development

2029047768

Source: https://www.industrydocuments.ucsf.edu/docs/lydl0000

their natural deaths which was as long as 32 months post exposure. Moribund animals were killed and when all animals were dead, complete autopsies were performed. The carcinogenic data obtained in the experiment are displayed in Table D-2. The historical control data for Osborne-Mendel rats are given in Table D-3, which are useful for obtaining stable non-zero estimates of the population background cancer rates.

The advantages of the Grimmer et al. (1988) study are:

- the cancer response is at the anticipated target site for ETS (i.e., the lung),
- the animals were observed for their full lifespan,
- the exposure was a continuous, lifelong leaching of the test material out of the beeswax/Trioctanoin pellet,
- multiple dose levels of the B[a]P positive control were employed,
- the average survival time for the experimental groups are given, which allows appropriate age adjustments to be made,
- the experiment is one of a series of six on complex PAH mixtures conducted by the same investigators that allows various hypotheses to be evaluated (e.g., dose additivity, irritation effects, etc.), and
- the experiments, quality control, and the investigators' reputations are of the highest order.

The disadvantages of the experiment are:

- exposure levels were most likely exponentially decreasing over time,
- the entire ETS condensate was not evaluated as one total exposure, and as a result, dose additivity of the ETS fractions must be assumed to obtain a relative potency estimate for the entire sample,
- the ETS condensate was not as aged as much as the ETS to which humans are expected to be exposed,
- multiple exposures were not given for the ETS fractions,

2029047769

Source: https://www.industrydocuments.ucsf.edu/docs/lydl0000

08 NOV 90

TABLE D-2. DATA THAT CAN BE USED TO OBTAIN RELATIVE POTENCY ESTIMATES FOR ETS CONSTITUENTS

Material	Dose mg x	Median survival t	Animals with epidermoid carcinomas/ Total animals
PAH-free material and PAH 2,3 rings	16.00	102	1/35
PAH 4 and more rings	1.06	105	5/35
Semivolatives (gaseous phase)	11.80	104	0/35
Benzo[a]Pyrene	0.03	93	3/35
	0.10	98	11/35
	0.30	75	27/35
Controls	Historical*	104	1/1945
	Vehicle	102	0/35
	Untreated	105	0/35

Source: Grimmer et al. (1988) and *Goodman et al. (1980)

TABLE D-3. HISTORICAL LUNG TUMOR CONTROL DATA FOR OSBORNE-MENDEL RATS

Lung tumors	Male	Female	Combined
Epidermoid Carcinomas	1/975	0/970	1/1945*
Alveolar/Bronchiolar Adenoma	4/975	2/970	6/1945
Alveolar Bronchiolar Carcinoma	3/975	3/970	6/1945

Source: Goodman et al. 1980
*Value used in ETS fraction relative potency estimation.

2029047770

Source: https://www.industrydocuments.ucsf.edu/docs/lydl0000

- the ETS mixture contains only the SS component and not the exhaled MS components of ETS, and
- the tumors were epidermoid carcinomas at the implant site rather than the alveolar-bronchiolar carcinomas usually associated with cigarette smoke.

The relative potency estimates of the ETS fractions and the theoretical estimates of the total emission based on the assumption of dose additivity are displayed in Table D-4. The dose additivity assumption has been shown to be consistent with information obtained in the same animal model system employing diesel or gas engine exhaust condensate. It is estimated that more than 70% of the total carcinogenic potency of the ETS is due to the 4 or more ringed PAHs (i.e. [.03673 x .05833]/.00302 = .7098). The relative potency estimates incorporate a special case of a two-stage mathematical model where the first stage preneoplastic clone has no selective advantage over normal tissue in the rat lung. The U.S. EPA is developing this model to estimate the relative potencies of other complex PAH mixtures whose carcinogenicity has been evaluated by the lung implant experimental system (Thorslund 1990).

TABLE D-4. RELATIVE POTENCY ESTIMATES OF ETS CONSTITUENTS*

Constituents	j	Dose mg. (π_j)	Fraction sample (f_j)	Maximum likelihood relative potency estimates (β_j)	% of total carcinogenicity attributable to constituent
PAH-free PAH 2,3 rings	1	16.00	0.55440	0.00158	29.02
PAH 4 and more rings	2	1.06	0.03673	0.05833	70.98
Semivolatiles (gaseous phase)	3	11.80	0.40887	0.00000	0.00
Weighted Total		28.86	1.00000	0.00302 $= \rho_1$	100.00

*Source of data: Grimmer et al. (1988)

2029047771

Source: https://www.industrydocuments.ucsf.edu/docs/lydl0000

Refinements in the estimate and a more complete documentation of the techniques employed in the analysis are required. Also, results from other experimental systems should be used to estimate relative potencies if possible. The discussion given here should be regarded only as an illustration of the type of analysis that can be conducted with some of the available information.

D.2.3. Inhalation Dose-Response Models for PAHs

Once the relative potency of ETS to the standard agent (e.g., B[a]P) has been estimated, the result is used to estimate the standard equivalent exposure units which are substituted into the standard inhalation dose-response model to obtain cancer risk estimates. As indicated in Table D-1, a number of alternatives exist upon which a standard inhalation dose-response model could be based. We shall evaluate three potential choices in this section.

D.2.3.1. Hamster Inhalation B[a]P Dose-Response--The only animal pure PAH inhalation experiment presently available that contains sufficient information to establish a dose-response relationship was conducted by Thyssen et al. (1981). In that study Syrian golden hamsters were exposed over their entire lifespan to pure B[a]P via an NaCl aerosol. The tumors most closely associated with B[a]P exposure were malignant and found in the larynx and pharynx. Summarized results of the study are displayed in Table D-5. Thorslund (1990) demonstrated that a two-stage model with exponential growth of preneoplastic targets can adequately describe the experiment. The advantages of using the Thyssen et al. (1981) study are:

- the exposure was well monitored over the entire length of the experiment,
- the average lifetime exposure and age at death was available for each animal in the experiment,

2029090772

Source: https://www.industrydocuments.ucsf.edu/docs/lydl0000

05 NOV 90

TABLE D-5. EXAMPLE OF ANIMAL INHALATION DOSE-RESPONSE MODEL SYRIAN GOLDEN HAMSTERS EXPOSED TO B[a]P VIA NaCl AEROSOL (Thyssen et al. 1981)

Lifetime average exposure (mg/m^3 B[a]P) x	Average survival (weeks) t	Animals examined	# of hamsters with one or more malignant laryngeal or pharyngeal tumors	
			Observed	Predicted (sum of individual data)
Historical Controls	80.0	226	1	0.642
Matched Controls	105.0	22	0	0.179
Total Controls	-----	248	1	0.821
Low Exposure Chamber (2 mg/m^3) 0.250 mg/m^3	100.5	24	0	1.23
Middle Exposure Chamber (10 mg/m^3) 1.016 mg/m^3	102.5	23	11	8.55
High Exposure Chamber (50 mg/m^3) 4.292 mg/m^3	70.7	23	17	17.98

Model*

$$P(x,t) = 1 - \exp - H(x,t)$$

$$H(x,t) = \frac{A}{G^2}(1 + Sx)^2[\exp(Gt) - 1 - Gt]$$

$$A = 3.865 \times 10^{-7},\ S = 6.843,\ G = 0.0263$$

*Thorslund (1990)

202904773

Source: https://www.industrydocuments.ucsf.edu/docs/lydl0000

- the animals were followed for their entire natural lifespan, and
- careful histopathological examinations were conducted on each animal.

The disadvantages of this study are:

- the hamsters are not humans,
- the tumors did not develop at the site anticipated in humans (i.e., lung),
- the hamsters are resistant to lung tumor formation, and
- the bioavailability of the B[a]P/NaCl aerosol may be different from the bioavailability of the PAH-matrix to which humans are exposed.

When confronted with inhalation exposures of complex PAH mixtures, the approach used by the EPA program offices has usually been to assume that the entire PAH mixture is as potent as B[a]P and to substitute the total exposure units into an earlier version of the B[a]P dose-response model derived from the Thyssen et al. (1981) data. This approach is recognized as having numerous uncertainties and as being conservative.

D.2.3.2. Rat Inhalation Diesel Engine Exhaust Dose-Response--The diesel engine exhaust rat inhalation study of Mauderly et al. (1987) offers another possibility for establishing an inhalation dose-response model. The advantages of this study are:

- the tumors appeared in the lung,
- the PAH-matrix is reasonably similar to the type one might expect with human exposures, and
- the lung burden exposure measurements are available.

The disadvantages of this study are:

- the rats are not humans,
- the lung tumors were for the most part not malignant, and
- the relative potency estimates compared to B[a]P for the exact diesel engine emissions used in the experiment are not available.

Source: https://www.industrydocuments.ucsf.edu/docs/lydl0000

The authors of the diesel engine exhaust paper obtained a dose-response model from their experiment results. However, their derived model would not be consistent with the usual regulatory assumption of low dose linearity. The same type of model employed for B[a]P could also be used for diesel engine exhaust. As a result, it would be desirable to acquire the individual animal data and fit the two-stage model to it to maintain a consistent approach throughout.

To use this study an estimate of the relative potency of ETS compared to diesel engine exhaust is required. Several options for obtaining such estimates exist. Perhaps the most direct approach would be to pool the data obtained in the Grimmer et al. (1987, 1988) papers on ETS and diesel engine exhaust which both employed the lung implant experimental system.

D.2.3.3. Human Inhalation Coke Oven Dose-Response--As noted previously, a dose-response model for coke oven emissions has been used by the U.S. EPA (1984). This model is based on a simple linear absolute risk model where the age-specific lung cancer risk is proportional to a lag-time adjusted cumulative exposure. The advantages of using this model are:

- it is based on human occupational epidemiological data,
- the coke oven exposure in inhaled air is comparable to how humans are exposed to ETS, and
- human coke oven inhalation data have been used by EPA to support regulatory decisions.

The disadvantages are:

- the model should be updated with regard to presently available mortality and exposure information, which would require considerable effort and resources,
- the cigarette smoking rates of the cohort members are unknown and thus are not adjusted for and could be an important confounding variable, and

2029004775

Source: https://www.industrydocuments.ucsf.edu/docs/lydl0000

08 NOV 90

- two different bioassay systems are required to obtain coke oven equivalent exposure units for ETS (i.e., ETS compared to B[a]P lung implant and coke oven emissions compared to B[a]P skin painting).

Re-evaluating the coke oven data using the same two-stage model approach employed for the other PAH data sets and the updated mortality experience appear to be a more scientifically sound path to follow, but would require substantial resources.

D.3. CIGARETTE-EQUIVALENT APPROACH

D.3.1. Overview

The most obvious approach for obtaining an inhalation dose-response model for ETS is to use direct cigarette smoking. The cigarette-equivalent approach (CEA) may be viewed as a special case of the RPA with an added complication. An adjustment is required to equate the lung deposition of carcinogens achieved by forced deep puffing on cigarettes with that resulting from normal inhalation of ETS in the surrounding air. In chapter 4 several approaches were discussed for making such adjustments that were felt to be inadequate. In this section an alternative general approach based on specific biological markers is suggested.

The three necessary elements required to develop a credible ETS dose-response model are:

- a state-of-the-art human mainstream smoke (MS) dose-response model,
- a relative potency estimate of ETS compared to MS, and
- a deposition rate equivalency for an appropriate biological marker (e.g., B[a]P-DNA adduct) between ETS and MS.

Each of these elements are discussed in the following sections.

2029004776

Source: https://www.industrydocuments.ucsf.edu/docs/lydl0000

04 NOV 90

D.3.2. State-of-the-Art Mainstream Cigarette Dose-Response Model

The ideal study for establishing a dose-response model for mainstream smoking would be based on a large cohort where many of the members had died of lung cancer, and the following information on each member of the cohort would be obtainable.

1. detailed smoking history
   a. age at start of smoking
   b. way of smoking
      i. inhalation patterns
      ii. average puffs per cigarette
      iii. length to which cigarette is smoked
   c. smoking intensity (i.e., number of cigarettes smoked per day)
   d. changing pattern of cigarette use over time
2. age at the start and end of the observation period and vital status at the end of the observation period.
3. most detailed pathology information available
4. demographic information
   a. race
   b. sex
   c. population density of domicile
   d. job status
5. workplace exposure to other known lung carcinogens

While the information contained in any actual conducted study will not even come close to conforming to the ideal, the list still is a convenient yard stick to measure potential studies for possible inclusion in our dose-response development. Different limited studies may be useful in contributing information concerning as little as one parameter in the eventual dose-response model.

2029094777

Source: https://www.industrydocuments.ucsf.edu/docs/lydl0000

D.3.2.1. Sources of Epidemiological Information Useful for Constructing a Dose-Response Model--A number of epidemiological studies may be viewed as primary sources of information concerning the dose-response relationship between mainstream cigarette smoke and lung cancer. These studies are briefly described below.

D.3.2.1.1. U.S. American war veterans (AWV). A cohort of about 300,000 American male war veterans was assembled in 1954 by Dorn and their mortality experience subsequently reported on by Kahn (1966), Rogot (1974), Whittemore (1988), and Freedman and Navidi (1989). This study includes information of age at start of smoking and number of cigarettes smoked per day. It also included ex-smokers. The study has the distinct advantage of having a total of 1266 lung cancer deaths available for analysis, and some details on individual cohort members are potentially obtainable from National Cancer Institute (NCI) data tapes. The study's disadvantages are that exposure information was only obtained at the beginning of the observation period so that changes in smoking patterns, except for stopping, cannot be taken into account. Also, there are no women in the cohort.

D.3.2.1.2. American Cancer Society (ACS) volunteers. The ACS enlisted the help of a large number of volunteer workers to help define and follow a cohort of about 440,000 male and 570,000 female predominantly middle to upper class white Americans. This study was reported by Hammond (1966) with additional information available from ACS personnel. The study is particularly useful in that it contains extensive information on women and nonsmokers not available from other sources. Additional advantages of the study are the large number of lung cancer deaths in the cohort, 1542 for male smokers and 164 for the females, and information on age when smoking started and length of follow-up is available for each cohort member. The

2029904778

Source: https://www.industrydocuments.ucsf.edu/docs/lydl0000